GENERAL NOTES

1.1 THE WORK SHALL COMPLY WITH APPLICABLE CODES, AMENDMENTS, RULES REGULATIONS, ORDINANCES, LAWS, ORDERS, APPROVALS, THAT ARE REQUIRED BY PUBLIC AUTHORITIES IN THE EVENT OF CONFLICT THE MOST STRINGENT REQUIREMENTS SHALL GOVERN. REQUIREMENTS INCLUDE, BUT ARE NO NECESSARILY LIMITED TO THE CURRENTLY APPLICABLE EDITORS OR PUBLICATIONS OF THE CODES REFERENCED ON ID SHEET

1.2 DIMENSIONS ARE NOT ADJUSTABLE WITH OUT APPROVAL OF THE DESIGNER UNLESS NOTED.

1.3 DIMENSIONS INDICATED TO BE "CLEAR" OR "CTR", SHALL BE MAINTAINED. ANY DISCREPANCIES OR VARIATIONS IN THESE DIMENSIONS SHALL BE REVIEWED WITH THE DESIGNER BEFORE BEGINNING CONSTRUCTION.

1.4 THE CONTRACTOR SHALL BE RESPONSIBLE FOR CHECKING CONTRACT DOCUMENTS, FIELD CONDITIONS, AND DIMENSIONS FOR ACCURACY AND CONFIRMING THAT WORK IS BUILDABLE AS SHOWN BEFORE PROCEEDING WITH CONSTRUCTION. CLARIFICATION REGARDING ANY CONFLICTS SHALL BE RECEIVED PRIOR TO RELATED WORK BEING STARTED.

1.5 IN THE EVENT OF CONFLICT BETWEEN THE DRAWINGS AND THE SPECIFICATIONS, THE SPECIFICATIONS SHALL GOVERN. DETAIL DRAWINGS TAKE PRECEDENCE OVER DRAWINGS OF LARGE SCOPE. SHOULD THE CONTRACTOR AT ANY TIME DISCOVER AN ERROR IN A DRAWING OR SPECIFICATION, OR DISCREPANCY OR VARIATION BETWEEN DIMENSIONS OF DRAWINGS AND MEASUREMENTS AT SITE, OR LACK OF DIMENSIONS OR OTHER INFORMATION, THE CONTRACTOR SHALL NOT PROCEED WITH THE WORK AFFECTED UNTIL CLARIFICATION HAS BEEN MADE.

1.6 ALL AREAS IN WHICH WORK IS PERFORMED SHALL BE CLEANED UP AT THE END OF EACH DAY.

1.7 THE GENERAL CONTRACTOR SHALL PROVIDE SHOP DRAWINGS OF ALL MILLWORK ITEMS, FOR APPROVAL BY DESIGNER WHERE REQUESTED.

1.8 NO SUBSTITUTION FOR ANY PRODUCT OR MATERIAL WILL BE ACCEPTED UNLESS AUTHORIZED BY THE DESIGNER IN THE FORM OF AN ADDENDUM.

1.9 THE CONTRACTOR SHALL CAREFULLY EXAMINE ALL DRAWINGS AND SPECIFICATIONS AND FULLY INFORM THEMSELVES OF ALL EXISTING CONDITIONS PERTAINING TO THE WORK OF THE CONTRACT. ANY ERROR, INCONSISTENCY OR OMISSION THEY MAY DISCOVER SHALL BE REPORTED TO THE DESIGNER AND IN NO CASE SHALL THEY PROCEED IN UNCERTAINTY.

1.10 PROVIDE BLOCKING WHERE REQUIRED TO SUPPORT EQUIPMENT AND/OR MISC ITEMS, TYPICAL CASEWORK, CABINETRY AND TV.

GENERAL NOTES

FINISH SCHEDULE NOTES

2.1 THE INSTALLER SHALL REFER TO THE FLOOR FINISH PLAN, WALL FINISH PLAN, RCP AND DETAILS FOR SPECIFIC LOCATIONS OF ALL FINISHES. SHOULD THE INSTALLER FIND ANY DISCREPANCIES OR CONFLICTS ON THE PLANS, HE SHOULD BRING THE ITEMS TO THE ATTENTION OF THE DESIGNER FOR DIRECTION BEFORE PROCEEDING WITH ANY WORK IN QUESTION.

2.2 FINISHES SHALL BE INSTALLED IN STRICT ACCORDANCE WITH THE MANUFACTURER'S SPECIFICATIONS AND INSTRUCTIONS IN A MANNER CONSISTENT WITH THE HIGHEST QUALITY STANDARDS OF WORKMANSHIP.

2.3 WALLS AND SURFACES RECEIVING PAINT AND WALL COVERINGS, SHALL BE PROPERLY PREPARED PRIOR TO FINISH INSTALLATION AS PER MANUFACTURER'S SPECIFICATIONS. "J" BOARDS OR OTHER GYPSUM METAL TRIM SHALL BE SPACKLE BLENDED INTO ADJACENT SURFACES.

2.4 WHERE PAINTS OR WALL COVERINGS OF TWO DIFFERENT TYPES OR COLORS ABUT, THE SEAM SHALL BE ON AN INSIDE CORNER ONLY. NOTIFY THE DESIGNER OF ANY CONFLICTS FOR DIRECTIONS.

2.5 GC TO PAINT ALL ACCESS PLATES, PANELS BOXES, ETC. TO MATCH ADJACENT PAINTED SURFACE.

2.6 NO SUBSTITUTION ALLOWED UNLESS APPROVED BY OR AUTHORIZED BY THE DESIGNER IN THE FORM OF AN ADDENDUM.

NOTES

MILLWORK NOTES

3.1 SUBMIT SHOP DRAWINGS AND HARDWARE CATALOG CUT SHEETS OF MILLWORK HARDWARE FOR REVIEW BY DESIGNER IN ACCORDANCE WITH THE REQUIREMENTS OF THE CONTRACT DOCUMENTS. SHOP DRAWINGS SHALL SHOW THE DESIGN AND ALL OTHER PERTINENT DATA AND INFORMATION AS REQUIRED FOR CONSTRUCTION. ANY VARIATION FROM THE DRAWINGS MUST BE CLEARLY NOTED AS A VARIATION FROM THE REQUIREMENT. FABRICATION OF MILLWORK SHALL NOT PROCEED UNTIL THE DESIGNER HAS APPROVED SHOP DRAWINGS.

3.2 THE METHOD OF MANUFACTURING FABRICATING AND INSTALLING MILLWORK AND EQUIPMENT AND ITS STRUCTURAL COMPONENTS DEFINED IN THE CONTRACT DOCUMENTS IS REPRESENTATIVE AND INDICATES DESIGN INTENT ONLY. IF THE MATERIALS, DETAILS OR DIMENSIONAL PROPERTIES ARE AT VARIANCE WITH THE GC'S OR MANUFACTURE'S RECOMMENDATIONS, ALTERNATE DETAILS WILL BE CONSIDERED FOR REVIEW WHEN SHOP DRAWINGS ARE SUBMITTED IN ACCORDANCE WITH THE CONTRACT DOCUMENTS, IT SHALL BE THE RESPONSIBILITY OF THE GC TO GUARANTEE THAT THE MILLWORK AND EQUIPMENT WILL HAVE PROPER SUPPORT, STABILITY AND FAULT PERFORMANCE. ALL WORK SHALL CONFORM TO DESIGN WOODWORK INSTITUTE (AWI) STANDARDS FOR PREMIUM CONSTRUCTION

3.3 BEFORE PROCEEDING WITH MILLWORK, THE FABRICATOR IS TO OBTAIN FIELD MEASUREMENTS AND VERIFY DIMENSIONS AND PROVIDE SHOP DRAWING DETAILS TO ENSURE AN ACCURATE MEASUREMENT. ANY VARIANCE FOUND IN THE FIELD MUST BE BROUGHT TO THE ATTENTION OF THE DESIGNER.

3.4 WHEN SIDE, END OR BACK OF MILLWORK IS EXPOSED, CONTRACTOR TO COORDINATE TO FINISH ALL EXPOSED SIDES.

3.5 FOR ALL MILLWORK INDICATING PLASTIC LAMINATE EXTERIOR FINISHED SURFACES, PROVIDE BLACK MELAMINE AS THE INTERIOR CABINET AND INTERIOR DRAWER SURFACE FINISH UNO. CABINET DOOR INTERIORS SHALL BE FINISHED WITH THE SAME PLASTIC LAMINATE AS EXTERIOR ACCORDING TO AWI STANDARDS.

3.6 ALL MILLWORK TO BE 3/4" CONSTRUCTION. ALL CLOSED INTERIOR SURFACES TO BE 3/4" MELAMINE EXCEPT WHERE OTHER WISE NOTED.

3.7 CONTRACTOR TO SUPPLY AND INSTALL ALL NECESSARY BLOCKING AND BRACING AS REQUIRED.

3.8 ALL DRAWERS TO BE COMPLETED WITH FULL EXTENSION GLIDES.

3.9 ALL CABINET DOORS TO HAVE CONCEALED 180 DEGREE HINGES.

3.10 MILLWORK TO BE FINISHED ON ALL EXPOSED SURFACES

GENERAL NOTES

CEILING NOTES

4.1 THE CONTRACTOR MUST VERIFY CEILING FINISH CONSTRUCTION WITH FINAL DRAWINGS PRIOR TO ORDERING FIXTURES AND ORDER FIXTURES WITH PROPER MOUNTING ARRANGEMENTS TO BE COMPATIBLE WITH TYPE OF CEILING IN WHICH FIXTURES TO BE MOUNTED.

4.2 ALL JUNCTION BOXES INDICATED AND/ OR REQUIRED SHALL BE SIZED TO ACCOMMODATE INCOMING AND OUTGOING FEEDERS.

4.3 CONTRACTOR SHALL BE RESPONSIBLE FOR ON-SITE MEASUREMENTS, QUANTITIES, & YARDAGES. CONTRACTOR SHALL PROVIDE QUANTITIES OF OWNER PURCHASED MATERIALS TO THE OWNER'S PURCHASING AGENT.

4.4 REFER TO DDI SPECIFICATIONS FOR ADDITIONAL INFORMATION ON ALL DECORATIVE LIGHT FIXTURES.

4.5 CONTRACTOR TO VERIFY CAPACITY OF ELECTRICAL PANEL.

GENERAL INFO

ARCHITECT: ZHA ARCHITECTS, PC
RICHARD E. HURDLE
AIA NCARB
4031 University Drive, Suite 120
Fairfax, VA 22030
PHONE: (703) 352-1933/ext 117
EMAIL: DHURDLE@ZHA-ARCHITECTS.COM

SENIOR PROJECT & DESIGN MANAGER: KATIE KARNES
DESIGN DIRECTIONS INTERNATIONAL
266 CRESCENT CIRCLE SW
MARIETTA, GEORGIA 30064
PHONE: 404.909.2529
EMAIL: KATIE@DDI.CC

INTERIOR DESIGNER: DULCIE EDELMAN
DESIGN DIRECTIONS INTERNATIONAL
266 CRESCENT CIRCLE SW
MARIETTA, GEORGIA 30064
PHONE: 678-981-5460
EMAIL: DULCIE@DDI.CC

GENERAL CONTRACTOR: TO BE DETERMINED

DRAWING SYMBOLS

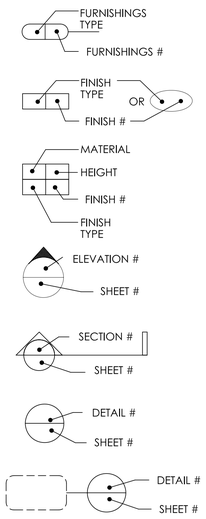

FURNISHINGS TAG

FINISH IDENTIFICATION TAG

REFLECTED CEILING TAG

ELEVATION TAG

SECTION TAG

DETAIL TAG

ENLARGED PLAN TAG

FINISH ABBREVIATIONS

AFF	ABOVE FINISH FLOOR
AWC	ACOUSTICAL WALL COVERING
CPT	CARPET
CPD	CARPET PAD
C	CONCRETE
ER	EPOXY RESIN
GL	GLASS/MIRROR
GR	GRANITE
GT	GLASS TILE
GYP	GYPSUM BOARD
M	METAL
MB	MARBLE
MI	MIRROR
MT	MOSAIC TILE
PTB	PORCELAIN TILE BASE
PT	PORCELAIN TILE
P	PAINT
PL	PLASTIC LAMINATE
PC	POURED CONCRETE (TERRAZZO)
RB	RUBBER BASE
RF	RUBBER FLOORING
RD	RAYDOOR
SF	SPECIALTY FINISH
SS	STAINLESS STEEL
ST	STAIN
SM	SHEET METAL
T	TRANSITION STRIP
QTB	QUARRY TILE BASE
QT	QUARRY TILE
Q	QUARTZ
VCT	VINYL COMPOSITION TILE
VCB	VINYL COVE BASE
WC	VINYL WALL COVERING
WB	WOOD BASE
WF	WATER FEATURE
WD	WOOD
WV	WOOD VENEER
WOM	WALK OFF MAT (TILES)

DRAWING INDEX

SHEET#	DRAWING TITLE	ISSUE DATE	REV.1	REV.2	REV.3	REV.4
ID-001	COVERSHEET / DRAWING INDEX	10.26.2020	11.3.2020	1.4.2021		
ID-007	PUBIC AREA FINISH SCHEDULE	10.26.2020		1.4.2021		
ID-008	PUBIC AREA FINISH SCHEDULE CONT.	10.26.2020	11.3.2020	1.4.2021		
ID-009	PUBIC AREA PLUMBING SCHEDULE	10.26.2020				
ID-010	PUBIC AREA PLUMBING SCHEDULE CONT.	10.26.2020				
ID-100	1ST LEVEL PUBLIC SPACE KEY PLAN	10.26.2020	11.3.2020			
ID-100 A	1ST LEVEL PUBLIC SPACE ENLARGED KEY PLAN A	10.26.2020				
ID-100 B	1ST LEVEL PUBLIC SPACE ENLARGED KEY PLAN B	10.26.2020	11.3.2020			
ID-101	1ST LEVEL PUBLIC SPACE FF&E PLAN	10.26.2020	11.3.2020	1.4.2021		
ID-101 A	1ST LEVEL PUBLIC SPACE ENLARGED FF&E PLAN A	10.26.2020	11.3.2020	1.4.2021		
ID-101 B	1ST LEVEL PUBLIC SPACE ENLARGED FF&E PLAN B	10.26.2020	11.3.2020	1.4.2021		
ID-102	1ST LEVEL PUBLIC SPACE FLOOR FINISH PLAN	10.26.2020	11.3.2020			
ID-102 A	1ST LEVEL PUBLIC SPACE ENLARGED FLOOR FINISH PLAN A	10.26.2020	11.3.2020			
ID-102 B	1ST LEVEL PUBLIC SPACE ENLARGED FLOOR FINISH PLAN B	10.26.2020	11.3.2020			
ID-103	1ST LEVEL PUBLIC SPACE WALL FINISH PLAN	10.26.2020	11.3.2020	1.4.2021		
ID-103 A	1ST LEVEL PUBLIC SPACE ENLARGED WALL FINISH PLAN A	10.26.2020	11.3.2020	1.4.2021		
ID-103 B	1ST LEVEL PUBLIC SPACE ENLARGED WALL FINISH PLAN B	10.26.2020	11.3.2020	1.4.2021		
ID-104	1ST LEVEL PUBLIC SPACE REFLECTED CEILING PLAN	10.26.2020	11.3.2020	1.4.2021		
ID-104 A	1ST LEVEL PUBLIC SPACE ENLARGED REFLECTED CEILING PLAN A	10.26.2020	11.3.2020	1.4.2021		
ID-104 B	1ST LEVEL PUBLIC SPACE ENLARGED REFLECTED CEILING PLAN B	10.26.2020	11.3.2020			
ID-800	ELEVATIONS - FRONT DESK/FOCAL WALL/HUDDLE/MARKET	10.26.2020		1.4.2021		
ID-801	ELEVATIONS - MARKET/BUSINESS AREA/NOOKS	10.26.2020	11.3.2020	1.4.2021		
ID-802	ELEVATIONS - RESTAURANT BAR	10.26.2020	11.3.2020	1.4.2021		
ID-803	ELEVATIONS - RESTAURANT BAR/TV MILLWORK/PRE-FUNCTION BALLROOM	10.26.2020	11.3.2020	1.4.2021		
ID-804	ELEVATIONS - PRE-FUNCTION BALLROOM/BALLROOM	10.26.2020	11.3.2020	1.4.2021		
ID-805	ELEVATIONS - BALLROOM MILLWORK NICHES/EXISTING CUPOLA CEILING	10.26.2020	11.3.2020			
ID-806	ELEVATIONS - BALLROOM FOCAL WALL/EXISTING CUPOLA CEILING	10.26.2020	11.3.2020			
ID-807	ELEVATIONS - MAIN MENS/WOMENS PUBLIC RESTROOM	10.26.2020	11.3.2020	1.4.2021		
ID-808	ELEVATIONS - MAIN MENS/WOMENS/PRE-FUNCTION AT MEETING ROOM	10.26.2020	11.3.2020	1.4.2021		
ID-809	ELEVATIONS - MEETING ROOM ALL WALLS	10.26.2020	11.3.2020			
ID-810	ELEVATIONS - AGENT 99/ 007 STUDIOS	10.26.2020	11.3.2020	1.4.2021		
ID-811	ELEVATIONS - 007 STUDIO/FITNESS CENTER	10.26.2020	11.3.2020	1.4.2021		
ID-812	ELEVATIONS - FITNESS CENTER/FITNESS CENTER RESTROOM/CONF.ROOM	10.26.2020	11.3.2020	1.4.2021		
ID-813	ELEVATIONS - WOMENS/MENS MEETING ROOM RESTROOM	10.26.2020	11.3.2020	1.4.2021		
ID-814	ELEVATIONS - MENS/WOMENS EMPLOYEE RESTROOM	10.26.2020	11.3.2020	1.4.2021		
ID-900	DETAILS - FRONT DESK	10.26.2020				
ID-901	DETAILS - REGISTRATION BACK WALL	10.26.2020		1.4.2021		
ID-902	DETAILS - REGISTRATION COLUMN	10.26.2020				
ID-903	DETAILS - MARKET	10.26.2020		1.4.2021		
ID-903.1	DETAILS - MARKET	10.26.2020	11.3.2020			
ID-904	DETAILS - HUDDLE	10.26.2020		1.4.2021		
ID-905	DETAILS - BUSINESS AREA	10.26.2020		1.4.2021		
ID-906	DETAILS - RESTAURANT BAR	10.26.2020				
ID-907	DETAILS - RESTAURANT BAR CONTINUED	10.26.2020		1.4.2021		
ID-908	DETAILS - RESTAURANT BAR TV WALL	10.26.2020		1.4.2021		
ID-909	DETAILS - BALLROOM CABINETRY	10.26.2020	11.3.2020			
ID-910	DETAILS - BALLROOM CEILING	10.26.2020		1.4.2021		
ID-911	DETAILS - BALLROOM TV WALL & COLUMN	10.26.2020		1.4.2021		
ID-912	DETAILS - BOARDING PASS STATION	10.26.2020		1.4.2021		
ID-913	DETAILS - MEETING ROOM CABINETRY	10.26.2020	11.3.2020			
ID-914	DETAILS - FITNESS CENTER	10.26.2020				

ZHA ARCHITECTS
4031 University Drive, Suite 120, Fairfax, VA, 22030
Telephone: (703)352-1933 Fax: (703)691-9171

DESIGN DIRECTIONS INTERNATIONAL
266 Crescent Circle SW, Marietta, GA 30064
Office: (770)424-8419 | Project Manager Cell: (404)909-2529

THIS DRAWING & THE DESIGN SHOWN THEREON ARE THE PROPERTY OF ZHA ARCHITECTS. THE REPRODUCTION, COPYING, OR USE OF THIS DRAWING WITH OUT THEIR SPECIFIC WRITTEN CONSENT IS PROHIBITED & ANY INFRINGEMENT WILL BE SUBJECT TO LEGAL ACTION.

THIS DRAWING IS THE PROPERTY OF DESIGN DIRECTIONS INTERNATIONAL AND IS NOT TO BE REPRODUCED OR COPIED WHOLE OR IN PART. IT IS ONLY TO BE USED FOR THE PROJECT AND SITE SPECIFICALLY INTENDED HEREIN, AND IS NOT TO BE USED ON ANY OTHER PROJECT. IT IS TO BE RETURNED UPON REQUEST. SCALES AS STATED HEREON ARE VALID ON THE ORIGINAL DRAWING. THE DIMENSIONS OF WHICH ARE 30" X 42" INCHES.

CLIENT: CHANTILLY HOTEL, LLC.
4335 CHANTILLY SHOPPING CENTER.
CHANTILLY, VA 20151

ISSUES/REVISIONS

NO.	DATE:	REMARKS:
	10/26/2020	BID DOCUMENT SET
1	11/3/2020	BID DOCUMENT SET REVISIONS
2	1/4/2021	DESIGN REVIEW REVISIONS

PROJECT NAME: CROWNE PLAZA® HOTELS & RESORTS
4335 CHANTILLY SHOPPING CENTER
CHANTILLY, VA

DRAWING NAME
PUBLIC SPACE COVER SHEET & SHEET INDEX

SCALE	PROJECT NO.
AS NOTED	1903
DRAWN BY	DATE
KAK & DVE	10.2.2020

DRAWING NO.
ID-001

CARPET

TAG	MANUFACTURER	INFORMATION	LOCATION	IMAGE
CP1-3	ENCORE HOSPITALITY CARPET DANA MINER 770-722-0588 DMINER@ENCORECARPETS.COM	STRIKE-OFF NUMBER: 1017-11-2 DESIGN NUMBER: AX20107-BA2 TYPE: AX-MINSTER WIDTH:13' - 2" COLORS: A559,B555,C555,D555,E558-,F107,C107,C660 PATTERN REPEAT: 13' - 2" W X 13' - 2" L FIBER TYPE: NYLON TOTAL WEIGHT: 36 OZ PER SQ YARD CONSTRUCTION: 7/8 AX DYE METHOD: SOLUTION DIED BACKING: WOVEN POLYPROPYLENE PILE HEIGHT: .280 GAUGE: 1/10'/ STITCHES: 12 SPI FLAMMABILITY: ASTM E-648 CLASS I / SMOKE DENSITY: ≥ 0.5 W/cm2 B547P0; PASS EN 13501 - 1: CfL-s1	LOBBY LOUNGE * REFER TO FLOODED PLANS FOR INSTALLATION DIAGRAMS	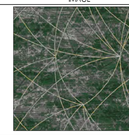
CP1-4	ENCORE HOSPITALITY CARPET DANA MINER 770-722-0588 DMINER@ENCORECARPETS.COM	STRIKE-OFF NUMBER: 1017-13-1 DESIGN NUMBER: AX20161-BA1 TYPE: AX-MINSTER WIDTH:13' - 2" COLORS: A559,B555,C555,D555,E558-,F107,C107,C660 PATTERN REPEAT: 13' - 2" W X 11'- 6" L FIBER TYPE: NYLON TOTAL WEIGHT: 36 OZ PER SQ YARD CONSTRUCTION: 7/8 AX DYE METHOD: SOLUTION DIED BACKING: WOVEN POLYPROPYLENE PILE HEIGHT: .280 GAUGE: 1/10'/ STITCHES: 12 SPI FLAMMABILITY: ASTM E-648 CLASS I / SMOKE DENSITY: ≥ 0.5 W/cm2 B547P0; PASS EN 13501 - 1: CfL-s1	RESTAURANT @ NOOKS * REFER TO FLOODED PLANS FOR INSTALLATION DIAGRAMS	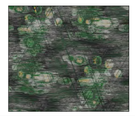
CP1-5	ENCORE HOSPITALITY CARPET DANA MINER 770-722-0588 DMINER@ENCORECARPETS.COM	STRIKE-OFF NUMBER: 1017-17-1 DESIGN NUMBER: AX20165-BA1 TYPE: AX-MINSTER WIDTH:13' - 2" COLORS: A559,B555,C555,D555,E558-,F107,C107,C660 PATTERN REPEAT: 13' - 2" W X 15'- 0" L FIBER TYPE: NYLON TOTAL WEIGHT: 36 OZ PER SQ YARD CONSTRUCTION: 7/8 AX DYE METHOD: SOLUTION DIED BACKING: WOVEN POLYPROPYLENE PILE HEIGHT: .280 GAUGE: 1/10'/ STITCHES: 12 SPI FLAMMABILITY: ASTM E-648 CLASS I / SMOKE DENSITY: ≥ 0.5 W/cm2 B547P0; PASS EN 13501 - 1: CfL-s1	PRE-PREFUNCTION @ MEETING ROOMS, BALLROOM & COATS * REFER TO FLOODED PLANS FOR INSTALLATION DIAGRAMS	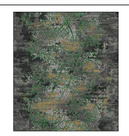
CP1-6	ENCORE HOSPITALITY CARPET DANA MINER 770-722-0588 DMINER@ENCORECARPETS.COM	STRIKE-OFF NUMBER: 1017-15-1 DESIGN NUMBER: AX20165-BA1 TYPE: AX-MINSTER WIDTH:13' - 2" COLORS: A559,B555,C555,D555,E558-,F107,C107,C660 PATTERN REPEAT: 13' - 2" W X 12'- 8" L FIBER TYPE: NYLON TOTAL WEIGHT: 36 OZ PER SQ YARD CONSTRUCTION: 7/8 AX DYE METHOD: SOLUTION DIED BACKING: WOVEN POLYPROPYLENE PILE HEIGHT: .280 GAUGE: 1/10'/ STITCHES: 12 SPI FLAMMABILITY: ASTM E-648 CLASS I / SMOKE DENSITY: ≥ 0.5 W/cm2 B547P0; PASS EN 13501 - 1: CfL-s1	BALLROOM * REFER TO FLOODED PLANS FOR INSTALLATION DIAGRAMS	
CP1-7	ENCORE HOSPITALITY CARPET DANA MINER 770-722-0588 DMINER@ENCORECARPETS.COM	STRIKE-OFF NUMBER: 1017-14-1 DESIGN NUMBER: AX20163-BA1 TYPE: AX-MINSTER BOUND AREA RUG AREA RUG SIZE: 13'-7" x 9'-11" / WIDTH: 15'-2" COLORS: A559,B555,C555,D555,E558-,F107,C107,C660 BINDING COLOR: D555 PATTERN REPEAT: 6 - 7" W X 8'- 2" L FIBER TYPE: NYLON / TOTAL WEIGHT: 36 OZ PER SQ YARD CONSTRUCTION: 7/8 AX DYE METHOD: SOLUTION DIED BACKING: WOVEN POLYPROPYLENE PILE HEIGHT: .280/ GAUGE: 1/10' / STITCHES: 12 SPI FLAMMABILITY: ASTM E-648 CLASS I / SMOKE DENSITY: ≥ 0.5 W/cm2 B547P0; PASS EN 13501 - 1: CfL-s1	STUDIOS AREA RUGS- BOUND (ONLY AT STUDIOS) & CONFERENCE ROOM- WALL TO WALL * REFER TO FLOODED PLANS FOR INSTALLATION DIAGRAMS	
CP1-8	ENCORE HOSPITALITY CARPET DANA MINER 770-722-0588 DMINER@ENCORECARPETS.COM	STRIKE-OFF NUMBER: 1017-4-2 DESIGN NUMBER: AX19009-BA3 TYPE: AX-MINSTER WIDTH:13' - 2" COLORS: A559,B555,C555,D555,E558-,F107,C107,C660 PATTERN REPEAT: 13' - 2" W X 13'- 2" L FIBER TYPE: NYLON TOTAL WEIGHT: 36 OZ PER SQ YARD CONSTRUCTION: 7/8 AX DYE METHOD: SOLUTION DIED BACKING: WOVEN POLYPROPYLENE PILE HEIGHT: .280 GAUGE: 1/10'/ STITCHES: 12 SPI FLAMMABILITY: ASTM E-648 CLASS I / SMOKE DENSITY: ≥ 0.5 W/cm2 B547P0; PASS EN 13501 - 1: CfL-s1	MEETING ROOM * REFER TO FLOODED PLANS FOR INSTALLATION DIAGRAMS	
CP1-9	ENCORE HOSPITALITY CARPET DANA MINER 770-722-0588 DMINER@ENCORECARPETS.COM	NAME: BIAS-N1185 TYPE: INFINITY COLORS: 02 A)6072 B) 6183 C) 6025 D)6073 WIDTH: 12' PATTERN REPEAT: 36"W X 36'L FIBER TYPE: ZEFTRON SD NYLON TOTAL WEIGHT: 35 OZ PER SQ YARD CONSTRUCTION: INFINITY TIP SHEAR DYE METHOD: SOLUTION DYED BACKING: WOVEN POLYPROPYLENE PILE HEIGHT: .280" TOTAL THICKNESS: .450" GAUGE: 1/10/ STITCHES: 12 SPI SMOKE DENSITY: ASTM E622/LESS THAN .450 FLAMMABILITY: ASTM E-648 CLASS I / DOC-FF1-1/97/ AATCC & ISO6925	BACK OF HOUSE AREAS- ALL OFFICES,RECEPTION WORK AREA CONFERENCE ROOM, STAIR WELLS, & RESTAURANT MANAGER	

CARPET PAD

TAG	MANUFACTURER	INFORMATION	LOCATION	IMAGE
CP-2	SPONGE CUSHIONING: LEGGETT & PLATT HOSPITALITY LEGGET & PLATT Phillip Herrin 877.808.7630 PHILLIP.HERRIN@LEGGETT.COM	TREDMOR- FOR GLUEDOWN INSTALLATION TREDMOR-2568GL COLOR: BLACK DENSITY: 22 LBS BACKING: QUICK LIFT WEIGHT: 68 OZ / THICKNESS: 0.250" SIZE: 54" x 60'(30 sy) PER ROLL FHA TYPE/CLASS: H 1&2 RADIANT PANEL: CLASS 1 CONTENT: SBR RUBBER FLAME CERTIFICATION: PILL TEST PASS. (DOC-FF 1-70)	LOBBY LOUNGE, RESTAURANT @ NOOKS,PRE-FUNCTION, BALLROOM, MEETING ROOM & BACK OF HOUSE AREAS	
CP-3	AMERICAN FIBER CUSHION FRED TEAL 678.313.0288 FRED@WMASHLEYGROUP.NET	PRODUCT: ALL SURFACE SUEDE-STOP WEIGHT: 30OZ THICKNESS: 0.160 DENSITY LBS/CU FT: 8 TENSILE STRENGTH LENGTH: 175 TENSILE STRENGTH WIDTH: 181 FLAME CERTIFICATION: PILL TEST: PASS. (DOC-FF 1-70) FHA TYPE CLASS: H1 & H2 RADIANT PANEL: ASTME 648 - CLASS 1 ROLL WIDTH: 6'-0" & 12'-0" ROLL LENGTH: 60'-0" / 60'	STUDIOS - UNDER EACH AREA RUG	 

WOOD BASE

TAG	MANUFACTURER	INFORMATION	LOCATION	IMAGE
WB-1	MILLWORK FABRICATOR TO PROVIDE	PRODUCT: PAINT GRADE WOOD BASE SPECIES: HARD MAPLE OR BIRCH COLOR: SW 7067 CITYSCAPE FINISH: SEMI GLOSS SIZE: 6" H X 9/16" THICK FIRE RATING: ASTM E84 CLASS II SMOKE DEVELOPED: 450 OR LESS / FLAME SPREAD: CLASS B LESS 450	LOBBY, BAR/RESTAURANT, MEETING ROOMS, BALLROOM, PRE-FUNCTION, COATS, 1ST FLOOR ELEV, LOBBY,STUDIOS 1ST FLOOR CORRIDORS, & CONFERENCE ROOM.	

PORCELAIN TILE

TAG	MANUFACTURER	INFORMATION	LOCATION	IMAGE
PT-1	CERAMIC TECHNICS LTD. PACE ADAMS 678.414.8685 PADAMS@CERAMICTECHNICS.COM	NAME: BAR US METAL WORKS COLOR: ALLOY SIZE: 12" X 24" THICKNESS: 3/8" / RECTIFIED FINISH: NATURAL GROUT: CUSTOM BUILDING PRODUCTS GROUT COLOR: #335 WINTER GRAY GROUT SIZE: 1/8" OFFSET DCOF: 0.42	VESTIBULE FRONT DESK, LOBBY LOUNGE, MARKET,RESTAURANT, ELEV. LOBBIES, CORRIDOR @ FITNESS CENTER FLOOR @ TOILET, & FLOOR & WALLS @ EMPLOYEE RESTROOMS	TILE: GROUT:
PT-2	GARDEN STATE TILE LESLIE WEINBURG 404.805.7904 LW@NEWGHGRIZ.NET	NAME: COLISEUM- HARDWOOD COLOR: HAPPY WALNUT COL610010000655 SIZE: 8" X 40" THICKNESS: 9MM - 10MM / RECTIFIED FINISH: NATURAL GROUT: CUSTOM BUILDING PRODUCTS GROUT COLOR: #335 WINTER GRAY GROUT SIZE: 1/8" OFFSET DCOF: 0.42	ACCENT @ BAR	TILE: GROUT:
PT-3	GARDEN STATE TILE LESLIE WEINBURG 404.805.7904 LW@NEWGHGRIZ.NET	NAME: BLACK HEXAGON COLOR: BLACK SIZE: 6" X 7" THICKNESS: 10.5MM FINISH: MATTE GROUT: CUSTOM BUILDING PRODUCTS GROUT COLOR: #335 WINTER GRAY GROUT SIZE: 1/8" OFFSET DCOF: 0.90	FLOORING INSET IN FRONT OF REGISTRATION / FRONT DESK, PERIMETER OF BAR, & FLOORING AT ELEVATOR CABS	TILE: GROUT:
PT-4	GARDEN STATE TILE LESLIE WEINBURG 404.805.7904 LW@NEWGHGRIZ.NET	NAME: BLACK STRIPED HEXAGON COLOR: BLACK GSPSTRBLK7HEX SIZE: 6"X 7" THICKNESS: 10.5MM FINISH: MATTE GROUT: CUSTOM BUILDING PRODUCTS GROUT COLOR: #335 WINTER GRAY GROUT SIZE: 1/8" OFFSET DCOF: 0.90	ACCENT @ FRONT DESK INSET & AROUND BAR	TILE: GROUT:

PORCELAIN TILE CONTINUE

TAG	MANUFACTURER	INFORMATION	LOCATION	IMAGE
PT-5	TRINITY SURFACES MIKE FELKER 404.788.6355 MIKEFELKER@TRINITYSURFACES.COM	NAME: VENEZIANA COLOR: ZINC SIZE: 12" X 24" THICKNESS: 10 MM FINISH: MATTE GROUT: CUSTOM BUILDING PRODUCTS GROUT COLOR: #342 GRAYSTONE GROUT SIZE: 1/8" OFFSET DCOF: 0.42	PUBLIC AREA RESTROOMS, FITNESS CENTER TOILET, & EMPLOYEE RESTROOMS	TILE: GROUT:
PT-6	TRINITY SURFACES (TILE) MIKE FELKER 404.788.6355 MIKEFELKER@TRINITYSURFACES.COM	NAME: MARQUEE COLOR: SALWA SIZE: 4" X 12" THICKNESS: 3/8" FINISH: GLOSSY GROUT: CUSTOM BUILDING PRODUCTS GROUT COLOR: #335 WINTER GRAY GROUT SIZE: 1/8" OFFSET	ACCENT TILE @ BACK BAR WALL	TILE: GROUT:
PT-7	TRADITIONS IN TILE ELIZABETH MINTON 770.295.8236 ELIZABETH.MINTON@TRADITIONSINTILE.COM	NAME: GRAND GATSBY - YGATSTHWJ COLOR: HASSIOS BLACK BLEND SIZE: 27 3/4" x 12 3/4" FINISH: MIXED-BRONZE METAL, THASSOS & NERO GROUT: CUSTOM BUILDING PRODUCTS GROUT COLOR: #381 BRIGHT WHITE GROUT SIZE: 1/8" OFFSET	PUBLIC RESTROOMS ACCENT @ SINK WET WALL	TILE: GROUT:
PT-8	TRINITY SURFACES MIKE FELKER 404.788.6355 MIKEFELKER@TRINITYSURFACES.COM	NAME: BLAKELY MANHATTEN COLOR: DOVE SIZE: 4" X 12" THICKNESS: 9MM FINISH: GLOSSY GROUT: CUSTOM BUILDING PRODUCTS GROUT COLOR: #342 GRAYSTONE GROUT SIZE: 1/8" OFFSET	PUBLIC RESTROOMS, EMPLOYEE RESTROOMS, FITNESS CENTER ACCENT @ WET WALL & BACK SPLASH @ EMPLOYEE KITCHENETTE	TILE: GROUT:

PORCELAIN TILE BASE

TAG	MANUFACTURER	INFORMATION	LOCATION	IMAGE
PTB-1	TRINITY SURFACES MIKE FELKER 404.788.6355 MIKEFELKER@TRINITYSURFACES.COM	NAME: VENEZIANA COLOR: ZINC SIZE: 12" X 24" CUT DOWN TO 6" H THICKNESS: 10 MM FINISH: MATTE GROUT: CUSTOM BUILDING PRODUCTS GROUT COLOR: #342 GRAYSTONE GROUT SIZE: 1/8" OFFSET DCOF: 0.42	PUBLIC AREA RESTROOMS, FITNESS CENTER TOILET, & EMPLOYEE RESTROOMS	BASE: GROUT:

GROUT

TAG	MANUFACTURER	INFORMATION	LOCATION	IMAGE
TYPICAL	CUSTOM BUILDING PRODUCTS SARAH McBEE 706.362.5013 SMCBEE@CROSSVILLESTUDIOS.COM.	PRODUCT TYPE: EPOXY GROUT COLLECTION: KERAPOXY CQ MATERIAL: EPOXY RESIN BASED WITH SILICA SAND SEALER: NO SEALER IS REQUIRED, GROUT IS WATER RESISTANT GROUT JOINTS: 1/16" MIN - 1/8" MAX - VERIFY TILE MFG RECCOMENDATION CERTIFICATION / CLASSIFICATION: EN13888 & ISO 22196	PUBLIC SPACE - ALL FLOOR & WALL GROUT THROUGHOUT **SEE TILE SPECIFICATION FOR COORDINATING GROUT COLORS	

QUARRY TILE

TAG	MANUFACTURER	INFORMATION	LOCATION	IMAGE
QT-1	CERAMIC TECHNICS LTD. PACE ADAMS 678.414.8685 PADAMS@CERAMICTECHNICS.COM	NAME: QUARRY BASICS COLOR: #507 PURTEAN GRAY SIZE: 4"x 4" THICKNESS: 1/2" FINISH: UNGLAZED GROUT: CUSTOM BUILDING PRODUCTS GROUT COLOR: #335 WINTER GRAY GROUT SIZE: 1/8" OFFSET DCOF: 0.42	BACK BAR & BACK OF HOUSE KITCHEN AREA'S	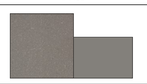

QUARRY TILE BASE

TAG	MANUFACTURER	INFORMATION	LOCATION	IMAGE
QTB-1	CERAMIC TECHNICS LTD. PACE ADAMS 678.414.8685 PADAMS@CERAMICTECHNICS.COM	NAME: QUARRY BASICS COVE BASE /Q3585 COLOR: #507 PURTEAN GRAY SIZE: 3 5/8" W x 6"H THICKNESS: 1/2" FINISH: UNGLAZED GROUT: CUSTOM BUILDING PRODUCTS GROUT COLOR: #335 WINTER GRAY GROUT SIZE: 1/8" OFFSET DCOF: 0.42	BACK BAR & BACK OF HOUSE KITCHEN AREA'S	

TRANSITION STRIPS

TAG	MANUFACTURER	INFORMATION	LOCATION	IMAGE
TR-01	SCHLUTER SYSTEMS EARL MAICUS 800-472-4588x111	PRODUCT: TRANSITION STRIP COLLECTION: SCHIENE COLOR: SATIN BRASS ANODIZED ALUMINUM. SIZE: FIELD VERIFY ** STAINLESS STEEL WITH TRAPEZOID - PERFORATED ANCHORING LEG WHICH IS SECURED IN THE MORTAR BOND COAT BENEATH THE TILE **	PUBLIC SPACE - BETWEEN CARPET TO TILE TRANSITIONS	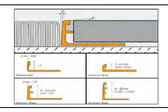
TR-02	SCHLUTER SYSTEMS EARL MAICUS 800-472-4588x111	PRODUCT: TRANSITION STRIP COLLECTION: DECO COLOR: SATIN BRASS ANODIZED ALUMINUM. SIZE: FIELD VERIFY ** DECORATIVE LINES WITHIN TILE COVERINGS AND EDGE PROTECTION AT TRANSITIONS FROM TILE COVERINGS TO OTHER SAME-HEIGHT SURFACES **	BETWEEN TILE AT BAR & TILE AT RESTAURANT, & BETWEEN TILE AT LOBBY & TILE INSET AT LOBBY	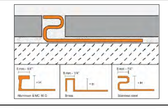
TR-03	SCHLUTER SYSTEMS EARL MAICUS 800-472-4588x111	PRODUCT: COVE TRANSITION STRIP COLLECTION: DILEX-AHK COLOR: SATIN BRASS ANODIZED ALUMINUM. SIZE: FIELD VERIFY ** COVE-SHAPED PROFILE WITH A SINGLE ANCHORING LEG THAT PROVIDES AN ATTRACTIVE, CLEAN, AND MAINTENANCE FREE ALTERNATIVE FOR INSIDE WALL CORNERS	PUBLIC RESTROOMS - BETWEEN FLOOR AND WALL TILES	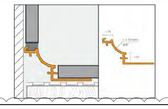
TR-04	SCHLUTER SYSTEMS EARL MAICUS 800-472-4588x111	PRODUCT: DESIGN BASE COLOR: SATIN BRASS ANODIZED ALUMINUM. SIZE: 2½" H x FIELD VERIFY LENGTH GC TO PROVIDE CORNERS AND END CAPS AS NEEDED, TYP. ** METAL ALTERNATIVE TO BASE BOARD, CLEAN POLISHED LOOK, ATTACHED USING ADHESIVE**	RESTAURANT BAR - BETWEEN BAR FACE AND FLOORING	 2

SEALED CONCRETE

KEY	MANUFACTURER	DESCRIPTION	LOCATION	IMAGE
SC-01	CONCRETE COATINGS INC	PRODUCT TYPE: HIGH PERFORMANCE, NON-YELLOWING CRYSTAL- CLEAR SEALER PRODUCT: GEMKOTE SUPER SEAL ACRYLIC BASED SEALER OR EQUAL FINISH: MATTE	BACK OF HOUSE AREAS, STORAGE ROOMS, NETWORK ROOM *SEE FLOOR FINISH PLAN FOR LOCATIONS	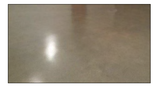

ENTRANCE GRILLES

KEY	MANUFACTURER	DESCRIPTION	LOCATION	IMAGE
EG-01	MATS INC RICHARD HUSTY 404.710.7357 RHUSTY@MATSINC.COM	PRODUCT TYPE: WALK OFF MAT / FOOT GRILLE PRODUCT: ULTRA ENTRY BASE COLOR: GRAY MAT INSERT PATTERN: NEW YORK MAT INSERT COLOR: CHARCOAL SPLASH SIZE: 60" W x 48" L x 5/8" H INSTALLATION: SHALLOW RECESSED WITH J FRAME WEIGHT: 1.7LBS PER SQ FT SAFETY SLIP: ASTM C1028 – .97 DRY AND 1.01 WET FIRE RATING: ASTM E648 CLASS 1, ASTM E662 <450 MAXIMUM ROLLING LOAD: 1,200 LBS PER WHEEL WARRANTY: 4 YEARS LIMITED	ENTRY VESTIBULES *SEE FLOOR FLOOR FINISH PLAN FOR LOCATIONS	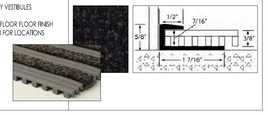

LUXURY VINYL TILE

TAG	MANUFACTURER	INFORMATION	LOCATION	IMAGE
LVT-1	ENCORE HOSPITALITY CARPET DANA MINER 770.722.0588 DMINER@ENCORECARPETS.COM	COLLECTION: SUBSTRATE /CONSTRUCTION: SPC RIGID CORE UNDERLAYMENT: 1MM ATTACHED IXPE PAD COLOR: SEDONA 639-C / THICKNESS: 5.3 MM / WEAR LAYER: 20MIL -WIDTH: 7"W x 48"L - DCOF: 0.38 DYNAMIC	STUDIOS	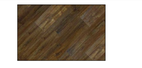 2
LVT-2	GERFLOR DANTE ERBA 470.380.2509 DANTE.ERBA@GERFLOR.USA.COM	STYLE: CREATION 28 UNDERLAYMENT: 100% RECYCLED BACKING COLOR: 0561 CARAT28 / FINISH: UV CURVED THICKNESS: 2.5 MM /WEAR LAYER: 28MIL / WIDTH: 9"W x 36"L / ACOUSTIC RATING: 69 IIC INSTALLATION: GLUE DOWN FLOATING FLAMMABILITY: ASTM E648 / NFPA 253 CLASS 1 SMOKE DENSITY: PASSED ASTM E662 FLAME SPREAD: ASTM E84 CLASS B	FITNESS CENTER	

VINYL COMPOSITION TILE

TAG	MANUFACTURER	INFORMATION	LOCATION	IMAGE
VCT-1	ARMSTRONG FLOORING ROBERT ELDY 770.314.4941 RAELDY@ARMSTRONGFLOORING.COM	COLLECTION: STANDARD EXCELON COLOR: 59045 PEAT TEXTURE: IMPERIAL TEXTURE THICKNESS: 1/8" / DIMENSIONS: 12X12 INSTALLATION: GLUE DOWN FIRE RATING: ASTM F1066 - CLASS III FLAME SPREAD: 0 / SMOKE DEVELOPED: 30	BACK OF HOUSE AREAS - EMPLOYEE BREAK ROOM, BALLROOM STORAGE ROOMS, MARKET STORAGE, STORAGE, STAIRWELLS *SEE FLOOR FINISH PLANS FOR LOCATIONS	

VINYL BASE

TAG	MANUFACTURER	INFORMATION	LOCATION	IMAGE
VB-1	JOHNSONITE- TARKETT ERICA COURSEY 770.605.8795 ERICA@ARNOLDHOSPITALITY.COM	MILLWORK BASE: MW-20416 PROFILE: MANDALAY COLOR: 20 CHARCOAL WG SIZE: 6" H X 8" THICK- 8'-0" LENGTHS FIRE RATING: ASTM E84 CLASS II SMOKE DEVELOPED: PASSED / FLAME SPREAD: PASSED	FITNESS CENTER	
VB-2	VPI SURFACING EVERYWHERE CORP. MICHELE MUSGROVE 404.640.0241 MMUSGROVE@WIMBIRD.COM	PRODUCT: VINYL WALL BASE PROFILE: COVE BASE COLOR: 35 GRAPHITE SIZE: 4" H FIRE RATING: ASTM E84 CLASS II SMOKE DEVELOPED: 450 OR LESS / FLAME SPREAD: CLASS B LESS 450	BACK OF HOUSE AREAS- ALL OFFICES,STORAGE ROOMS, EMPLOYEE BREAK ROOM, KITCHEN,STAIRWELLS,COATS, & RESTAURANT MANAGER	

PAINT

TAG	MANUFACTURER	INFORMATION	LOCATION	IMAGE
P-2	SHERWIN WILLIAMS MATTHEW HEALD 404-323-2263 MATTHEW.J.HEALD@SHERWIN.COM	PRODUCT TYPE: 100% ACRYLIC LATEX COLOR: SW 9163 TIN LIZZIE	LOWER CABINETS @ MARKET	
P-3	SHERWIN WILLIAMS MATTHEW HEALD 404.323.2263 MATTHEW.J.HEALD@SHERWIN.COM	PRODUCT TYPE: 100% ACRYLIC LATEX COLOR: SW 7067 CITY SCAPE	OVERALL PUBLIC AREA DOORS, TRIM, WOOD BASE, ALL ACCENT CEILING BEAMS AT PUBLIC AREA (LOBBY, REGISTRATION,MILLWORK), COFFER CEILING AT MARKET 2	
P-4	SHERWIN WILLIAMS MATTHEW HEALD 404.323.2263 MATTHEW.J.HEALD@SHERWIN.COM	PRODUCT TYPE: 100% ACRYLIC LATEX COLOR: SW 7065 ARGOS	BALLROOM CUPOLA CEILING, HARD CEILING AT STUDIOS, DECORATIVE CEILING AT ELEV. LOBBY & MARKET CEILINGS, COFFER CEILING AT PRE-FUNCTION, & OVERALL CEILING AT CONFERENCE ROOM 2	
P-5	SHERWIN WILLIAMS MATTHEW HEALD 404.323.2263 MATTHEW.J.HEALD@SHERWIN.COM	PRODUCT TYPE: 100% ACRYLIC LATEX COLOR: SW 7006 EXTRA WHITE	OVERALL CEILINGS @ PUBLIC AREAS	
P-6	SHERWIN WILLIAMS MATTHEW HEALD 404.323.2263 MATTHEW.J.HEALD@SHERWIN.COM	PRODUCT TYPE: 100% ACRYLIC LATEX COLOR: SW 7066 GRAY MATTERS	OVERALL WALL BEHIND HUDDLES, ALL WALLS @ BOH, ALL STORAGE ROOMS, NETWORK, ALL CLOSETS, SERVICE CORRIDOR, STAIR WELLS, & EMPLOYEE RESTROOM WALLS	
P-7	SHERWIN WILLIAMS MATTHEW HEALD 404.323.2263 MATTHEW.J.HEALD@SHERWIN.COM	PRODUCT TYPE: 100% ACRYLIC LATEX COLOR: SW 7068 GRIZZLE GRAY	COFFER CEILING @ BAR	
P-8	SHERWIN WILLIAMS MATTHEW HEALD 404.323.2263 MATTHEW.J.HEALD@SHERWIN.COM	PRODUCT TYPE: 100% ACRYLIC LATEX COLOR: SW 7007 CEILING BRIGHT WHITE	OVERALL CEILINGS @ FITNESS CENTER	
P-9	SHERWIN WILLIAMS MATTHEW HEALD 404.323.2263 MATTHEW.J.HEALD@SHERWIN.COM	PRODUCT TYPE: 100% ACRYLIC LATEX COLOR: SW6258 TRICORN BLACK	TRIM @ FITNESS CENTER EXTERIOR WINDOWS	
P-10	NOT USED REMOVED FROM PROJECT			2
P-11	SHERWIN WILLIAMS MATTHEW HEALD 404.323.2263 MATTHEW.J.HEALD@SHERWIN.COM	PRODUCT TYPE: 100% ACRYLIC LATEX COLOR: SW7014 EIDER WHITE	DOORS AND TRIM TO BACK OF HOUSE / STORAGE AT WC-10 & WC-14	

NOTES:
ALL PAINTED SURFACES TO CONSIST OF MULTI-COAT FINISH SYSTEMS. IN GENERAL FINISH LEVELS SHALL BE AS FOLLOWS:

- FLAT - CEILINGS AND WALLS NOT ACCESSIBLE TO GUESTS AND EMPLOYEES
- EGGSHELL - ALL WALLS IN GENERAL UNLESS NOTED OTHERWISE.
- SEMI-GLOSS / SATIN - TRIM WORK, DOORS, GRILLES AND VENTS, SERVICE AREAS, BACK-OF-HOUSE, AND WATER CLOSET AREAS IN PUBLIC RESTROOMS.
- GLOSS - FOOD PREPARATION, UTILITY AREAS, MAIN SERVICE CORRIDOR AND WET AREAS

WALLCOVERING

NOTE- INSTALLER RESPONSIBLE FOR CORRECT QUANTITY TAKE-OFF

TAG	MANUFACTURER	INFORMATION	LOCATION	IMAGE
WC-5	US VINYL WALLCOVERING- LANCE SHEPPARD 770.596.6656 LANCE@SPECMYPLEASE.COM	PATTERN NUMBER: USV2-SOR-04 PATTERN NAME: SORREN COLOR: CHARCOAL WIDTH: 52"/54" W / TYPE: TYPE II REPEAT: 52"H x 24"V / WEIGHT: 21 OZ PER LINEAR YARD BACKING: OSNABURG / CONTENT- 100% VINYL MATCH: PATTERN MATCH/NON-REVERSIBLE PATTERN FIRE RATING: ASTM E84 CLASS A & NFPA 286 SMOKE DEVELOPED: 70 / FLAME SPREAD: 25	NOOK ACCENT WALL	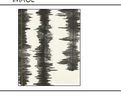
WC-6	WOLF GORDON- DIANE MANGUM 404.831.4926 DIANE.MANGUM@WOLFGORDON.COM	PATTERN NUMBER: GOH 13680805 / MRY 3181 PATTERN NAME: MANTARAY COLOR: CARBON CONTENT: 100% VINYL/ TYPE: TYPE II WIDTH: 52" W / WEIGHT: 20 OZ PER LINEAR YARD BACKING: OSNABURG MATCH: STRAIGHT HANG / RANDOM MATCH FIRE RATING: ASTM E84 CLASS A & NFPA 286 SMOKE DEVELOPED: 10 / FLAME SPREAD: 15	ACCENT @ BAR	
WC-7	DESIGNTEX SANDI MARTIN 678.993.7154 SMARTIN1@DESIGNTEX.COM	PATTERN NUMBER: 6730-801 PATTER

WALLCOVERING CONTINUED

TAG	MANUFACTURER	INFORMATION	LOCATION	IMAGE
WC-8	DESIGNTEX SANDI MARTIN 678.993.7154 SMARTIN1@DESIGNTEX.COM	PATTERN NUMBER: 6692-001 PATTERN NAME: HESTER COLOR: GRAPHITE WIDTH: 57" W / TYPE: TYPE I / BACKING: OSNABURG REPEAT: 71"V x 50"H / WEIGHT: 15 OZ PER LINEAR YARD CONTENT- 40%LATEX,30%CELLULOSE 20%CELLULOSE, 10%POLYESTER MATCH: STRAIGHT HANG- STRAIGHT ACROSS MATCH FIRE RATING: ASTM E84 CLASS A & CATB 117-2013 SMOKE DEVELOPED: N/A / FLAME SPREAD: N/A	ACCENT @ AGENT 99 STUDIO	
WC-9	US VINYL WALLCOVERING- LANCE SHEPPARD 770.596.6656 LANCE@SPECIVEPLEASE.COM	PATTERN NUMBER: USV2-070-03 PATTERN NAME: OTUS COLOR: CHARCOAL WIDTH: 54" W REPEAT: STRAIGHT ACROSS PATTERN MATCH TYPE: TYPE II WEIGHT: 21 OZ PER LINEAR YARD BACKING: SCRIM / CONTENT- 100% VINYL MATCH: RANDOM MATCH - NON-REVERSIBLE FIRE RATING: ASTM E84 CLASS A & NFPA 286	ACCENT NICHE @ BALLROOM & MEETING ROOMS	
WC-10	MDC WALLCOVERING- GENON CONTRACT BJ BLANCHARD 404.368.4147 RBLANCHARD@MDCWALL.COM	PATTERN NUMBER: MRE1197 PATTERN NAME: LIBRARY COLOR: OPTIC WHITE CONTENT: NON-WOVEN BACKED VINYL / TYPE: TYPE II WIDTH: 54" W / WEIGHT: 20 OZ PER LINEAR YARD BACKING: NON-WOVEN MATCH: RANDOM REVERSIBLE FIRE RATING: ASTM E84 CLASS A SMOKE DEVELOPED: 35/ FLAME SPREAD: 25	OVERALL @ BALLROOM MEETING ROOMS, STUDIOS & CONFERENCE ROOM	
WC-11	EYKON- MOMENTUM JEAN HALL 800.366.6839 EXT.835 JHALL@MOMTEX.COM	COLLECTION: STUDIO SOURCE PATTERN NUMBER: BX4765 PATTERN NAME: TO THE POINT WIDTH: 54" W REPEAT: N/A / TYPE: TYPE II WEIGHT: 20 OZ PER LINEAR YARD BACKING: NON WOVEN / CONTENT- 100% VINYL MATCH: NO REPEAT / RANDOM MATCH FIRE RATING: ASTM E84 CLASS A SMOKE DEVELOPED: N/A / FLAME SPREAD: N/A	OVERALL @ PUBLIC RESTROOMS	
WC-12	NATIONAL SOLUTIONS KARI LEWIS 678.572.2169 KARI.LEWIS@NATIONALSOLUTIONS.COM	COLLECTION: VYRON PATTERN NUMBER: YA7481PT PATTERN NAME: PATINA STONE COLOR: WHITE CRYSTAL WIDTH: 54" W / TYPE: TYPE II WEIGHT: 20 OZ PER LINEAR YARD BACKING: NON WOVEN / CONTENT- 100% VINYL MATCH: NO REPEAT / RANDOM MATCH FIRE RATING: ASTM E84 CLASS A & NFPA 286 SMOKE DEVELOPED: N/A / FLAME SPREAD: N/A	OVERALL LOBBY PUBLIC AREAS, & VESTIBULES	
WC-13	MAHARAM JASON SHARPE 678.895.3043 JSHARPE@MAHARAM.COM	PATTERN NUMBER: 3999636-015 PATTERN NAME: CLUSTER COLOR: HARVEST WIDTH: 52" W / TYPE: TYPE III WEIGHT: 35 OZ PER LINEAR YARD BACKING: COTTON OSNABURG CONTENT- 100% NON-PHTHALATE VINYL MATCH: NON-MATCH FIRE RATING: ASTM E84 CLASS A & NFPA 286 SMOKE DEVELOPED: N/A / FLAME SPREAD: N/A	ACCENT @ 1ST FLR ELEV. LOBBY	
WC-14	WOLF GORDON- SYMPHONY DIANE MANGUM 404.831.4926 DIANE.MANGUM@WOLFGORDON.COM	PATTERN NUMBER: GOH 13680734 PATTERN NAME: RHCD COLOR: AFTERNOON CALM CONTENT: 100% VINYL TYPE: TYPE II WIDTH: 54" W / WEIGHT: 20 OZ PER LINEAR YARD BACKING: OSNABURG MATCH: STRAIGHT HANG / RANDOM MATCH FIRE RATING: ASTM E84 CLASS A & NFPA 286	PRE-FUNCTION @ MEETING ROOMS & BALL ROOM	
WC-15	MDC WALLCOVERING- GENON CONTRACT BJ BLANCHARD 404.368.4147 RBLANCHARD@MDCWALL.COM	PATTERN NUMBER: WDCY5141-42 PATTERN NAME: CHAMELEON STRIPE COLOR: MYSTICAL IVORY CONTENT: FABRIC BACKED VINYL / TYPE: TYPE II WIDTH: 54" W / WEIGHT: 20 OZ PER LINEAR YARD BACKING: OSNABURG MATCH: RANDOM REVERSIBLE FIRE RATING: ASTM E84 CLASS A SMOKE DEVELOPED: 40/ FLAME SPREAD: 20	OVERALL @ FITNESS CENTER	
WC-16	KOROSEAL STACY COSTA 404.977.2187 SCOSTA@KOROSEAL.COM	PATTERN NUMBER: LEM-602 PATTERN NAME: LE MUSE COLOR: THE POET CONTENT: 100% VINYL / TYPE: TYPE II WIDTH: 52"-54" W / WEIGHT: 20 OZ PER LINEAR YARD BACKING: FABRIC BACKED VINYL MATCH: RANDOM MATCH / REVERSE HANG FIRE RATING: ASTM E84 CLASS A & NFPA 286 SMOKE DEVELOPED: 30 / FLAME SPREAD: 10	ACCENT AT TV WALL @ FITNESS CENTER & FITNESS CENTER TOILET	
WC-17	US VINYL WALLCOVERING- LANCE SHEPPARD 770.596.6656 LANCE@SPECIVEPLEASE.COM	PATTERN NUMBER: USV2-090-37 PATTERN NAME: BARRETT COLOR: DOVE WIDTH: 52"/54" W / TYPE: TYPE II REPEAT: 52"H x 24"V WEIGHT: 21 OZ PER LINEAR YARD BACKING: OSNABURG / CONTENT- 100% VINYL MATCH: RANDOM MATCH/REVERSIBLE PATTERN FIRE RATING: ASTM E84 CLASS A & NFPA 286 SMOKE DEVELOPED: 70 / FLAME SPREAD: 25	BACK OF HOUSE AREAS- CONFERENCE ROOM, OFFICES, WORK AREA, BREAKROOM, KITCHEN, COATS, REST. MANAGERS, OFFICE & EMPLOYEE RESTROOMS	
WC-18	EYKON- MOMENTUM JEAN HALL 800.366.6839 EXT.835 JHALL@MOMTEX..COM	COLLECTION: SOURCE ONE PATTERN NUMBER: PTGL-06 PATTERN NAME: GLAMOUR COLOR: GLAUCOUS WIDTH: 54" W CONTENTS: 67% POLYESTER & 33% OLEFIN YARNS BACKING: ACRYLIC / LATEX / FINISH: CRYPTON GREEN ABRASION RESISTANCE: 100,000 DOUBLE RUBS FIRE RATING: ASTM E84 CLASS A COLOR FASTNESS: CLASS 5	MEETING ROOM - AIR WALLS	

QUARTZ

TAG	MANUFACTURER	INFORMATION	LOCATION	IMAGE
Q-1	CAMBRIA SHANNON MARTIN 404.693.6705 SHANNON.MARTIN@CAMBRIA.COM	PATTERN: BRITTANICCA COLLECTION: MARBLE COLLECTION STYLE: EASED EDGE THICKNESS: 3 CM (1 1/2") SLAB SIZE: 65-1/2" W x 132" L FINISH: POLISHED FIRE RATING: ASTM E84 CLASS A, ASTM E662	FRONT DESK TOP & FACADES, MARKET OVERALL COUNTERS, HUDDLE TABLE TOPS, BAR TOP & BACK BAR TOP	
Q-2	CAMBRIA SHANNON MARTIN 404.693.6705 SHANNON.MARTIN@CAMBRIA.COM	PATTERN: MERSEY COLLECTION: LUXURY SERIES STYLE: EASED EDGE SLAB SIZE: 65-1/2" W x 132" L THICKNESS: 3 CM (1 1/2") FINISH: POLISHED FIRE RATING: ASTM E84 CLASS A, ASTM E662	MARKET PLACE ISLAND	
Q-3	CAMBRIA SHANNON MARTIN 404.693.6705 SHANNON.MARTIN@CAMBRIA.COM	PATTERN: QUEEN ANNE COLLECTION: LUXURY SERIES STYLE: EASED EDGE SLAB SIZE: THICKNESS: 3 CM 9 1 1/2") FINISH: POLISHED FIRE RATING: ASTM E84 CLASS A, ASTM E662	PUBLIC RESTROOMS VANITIES, MEETING ROOM NICHE, & BALLROOM NICHE MILLWORK COUNTER TOPS	

NOTES:
- VERIFY DIMENSIONS BY FIELD MEASUREMENTS PRIOR TO INSTALLATION
- LAYOUT SURFACES TO MINIMIZE JOINTS. JOINT WIDTH SHOULD NOT BE LARGER THAN 1/32"
- VERIFY THAT SUBSTRATES SUPPORTING SURFACES ARE PLUMB, LEVEL AND FLAT TO WITHIN 1/8 INCH IN 10 FEET AND THAT ALL NECESSARY SUPPORTS AND BLOCKING ARE IN PLACE
- BASE CABINETS SHALL BE SECURED TO ADJOINING UNITS AND BACK WALL

STAIN

TAG	MANUFACTURER	INFORMATION	LOCATION	IMAGE
ST-1	MILLWORK FABRICATOR TO PROVIDE	PRODUCT TYPE: COMMERCIAL GRADE STAIN WOOD SPECIES: MAPLE VENEER CUT: BRITSAWN COLOR: STAINED TO MATCH WILSONART LAMINATE - WALNUT, HIBORITE - 7965K-12 FINISH: LOW LUSTER 1	FRONT DESK, COLUMN MILLWORK, HUDDLE, MARKET ISLAND BASE CABINET, DOORS AT MEETING ROOM, BALLROOMS, & RESTROOMS, MILLWORK AT MEETING ROOMS & BALLROOM, ACCENT CEILING ABOVE BAR, TV MILLWORK WALLS,	
ST-2	MILLWORK FABRICATOR TO PROVIDE	PRODUCT TYPE: COMMERCIAL GRADE STAIN WOOD SPECIES: MAPLE COLOR: STAINED TO MATCH WILSONART LAMINATE - DESIGNER WHITE - (3356-60 FINISH: LOW LUSTER	ACCENT AT TV MILLWORK WALL AT BAR	
ST-3	MILLWORK FABRICATOR TO PROVIDE	PRODUCT TYPE: COMMERCIAL GRADE STAIN WOOD SPECIES: MAPLE COLOR: STAINED TO MATCH WILSONART LAMINATE - BLACK - 1595-60 FINISH: LOW LUSTER	OVERALL FRAME AND BODY AT TV MILLWORK WALL AT BAR	

NOTES:
ALL STAINED SURFACES TO CONSIST OF MULTI-COAT FINISH SYSTEMS. IN GENERAL FINISH LEVELS SHALL BE AS FOLLOWS:
- STAINING: PROVIDE FACTORY FINISHED MILLWORK, INCLUDE TWO COATS MINIMUM OF STAIN AND SEAL WITH TWO COATS OF LOW LUSTER LACQUER.
- MILLWORK FABRICATOR TO PROVIDE (5) FINISH SAMPLES IN VARIOUS MATCHING TONES (LIGHT, MEDIUM, & DARK) TO DESIGNER FOR REVIEW AND APPROVAL. FINISH SAMPLES TO BE MINIMUM 4" W x 4"D. FAILURE TO FOLLOW THIS INSTRUCTION WILL RESULT IN DELAYS IN THE REVIEW PROCESS. CONTACT INTERIOR DESIGNER IF FURTHER INFORMATION IS REQUIRED.

PLASTIC LAMINETS

TAG	MANUFACTURER	INFORMATION	LOCATION	IMAGE
PL-1	WILSONART DAVID MAY 770.527.2466 MAYDW@WILSONART.COM	COLLECTION: PREMIUM COLOR: WALNUT HEIGHTS NUMBER: 7965K-12 FINISH: SOFT GRAIN	LOWER MILLWORK CABINETS AT BACK BAR & BACK SIDE OF REGISTRATION PODS	

METAL

KEY	MANUFACTURER	DESCRIPTION	LOCATION	IMAGE
M-1	MILLWORK FABRICATOR TO PROVIDE	PRODUCT TYPE: BASE METAL VARIOUS SIZES & THICKNESS, FABRICATOR TO REVIEW ELEVATIONS & DETAILS, & DETERMINE BEST APPROACH FINISH: TIGER ETCH WILSONART - SATIN BRUSHED GOLD ALUMINUM - 4258-00-419	FRONT DESK BACK FOCAL WALL, ACCENT REVEALS AT FRONT DESK & BUSINESS CENTER MILLWORK, BAR/POLES AT HUDDLE MILLWORK, BACK BAR SHELVING, & TYPICAL TOE KICK AT ALL STAINED MILLWORK, SEE ELEVATIONS FOR EXACT PLACEMENTS.	

NOTES:
METAL/MILLWORK FABRICATOR TO SUBMIT SAMPLE TO INTERIOR DESIGNER FOR REVIEW & APPROVAL

HARDWARE

KEY	MANUFACTURER	DESCRIPTION	LOCATION	IMAGE
HDW-1	RICHELIEU HARDWARE KIERSTEN LENT 770.362.6397 KLENT@RICHELIEU.COM.	PRODUCT TYPE: CONTEMPORARY METAL PULL - 7348 PRODUCT NUMBER: BP7348128CHBR2 FINISH: CHAMPAGNE BRONZE SIZE: 5 1/32" CENTER TO CENTER / OVERALL: 5 23/32"	DECORATIVE HARDWARE AT MILLWORK CABINETS & DRAWERS	
HDW-2	KEGWORKS CUSTOMER SERVICE 877.636.3673 www.kegworks.com 2	PRODUCT TYPE: FOOT RAIL & 2" DIA 90 DEGREE BRACKETS, BAR FOOT RAIL WITH END CAP PRODUCT NUMBER: BRACKET-SB-7697P-2 / TUBING-SB-99S-XX / CAP - SB-7696-2 FINISH: BRUSHED SATIN BRASS SIZE: BRACKET - 2" W x 7" D x 7" H TUBING STOCK - COMES IN 4, 6, & 8 FEET LENGTHS CAP: 2" DIA	FOOT RAIL AT BAR	
HDW-3	KEGWORKS CUSTOMER SERVICE 877.636.3673 www.kegworks.com 2	PRODUCT TYPE: DOUBLE CIBLING HOOKS PRODUCT NUMBER: SB0A3 FINISH: SATIN BRASS SIZE: 1" x 1 7/8" x 2 1/4" PROJECTION WEIGHT LIMIT: 22 lbs	PURSE HOOKS AT BAR	

SPECIAL FINISHES

TAG	MANUFACTURER	INFORMATION	LOCATION	IMAGE
SF-1	KINON SURFACE DESIGN INC. MITCHELL GREENBERG MITCH@KINON.COM	PRODUCT: KINON ULTRA CAST SHEET COMPOSITE PATTERN: 484-640 COLOR: X03659 LNX03659 LNX03676 PANEL SIZE: 5'W x 12'H / THICKNESS: 0.1" FIRE RATING: ASTM E84 CLASS A SMOKE DEVELOPED: 60 FLAME SPREAD: 25	FACE @ BAR FRONT *KINON COMPOSITE SHEETS ALSO COMES ON MDF	
SF-2	WOLF GORDON- SCUFFMASTER DIANE MANGUM 404.831.4926 DIANE.MANGUM@WOLFGORDON.COM	PRODUCT TYPE: WATERBASED POLYURETHANE ACRYLIC COLOR: GOH 31837860 - SOLID METAL /SM10251 APPLICATION: SPRAY APPLICATION: 4,200 SCRUBS. IN ACCORDANCE WITH ASTM D2486 VOC CONTENT: 130 g/l	ACCENT APPLIED TRIM @ HUDDLE WALL	
SF-3	CUT MAPS CUSTOMER SERVICE HELLO@CUTMAPS.COM	PRODUCT TYPE: CUSTOM CUT MAP SCREEN PATTERN: WASHINGTON DC LOCAL MAP FINISH: TO MATCH WILSONART - SATIN BRUSHED GOLD ALUMINUM - 4258-00-419 THICKNESS: MFG TO RECOMMEND FIRE RATING: ASTM E84 CLASS A	FRONT DESK BACK FOCAL WALL	
SF-4	DESIGNTEX/DANOC SANDI MARTIN 678.993.7154 SMARTIN1@DESIGNTEX.COM	PRODUCT: 3M DI- NOC PATTERN NAME: CONCRETE MORTAR CN PATTERN NUMBER: CN-1622 WIDTH: 48" W BACKING: ACRYLIC PRESSURE-SENSITIVE ADHESIVE WEIGHT: 1.24 OZ PER LINEAR YARD THICKNESS: 2MM CONTENT: 100% VINYL FIRE RATING: ASTM E84 CLASS A & NFPA 286 SMOKE DEVELOPED: N/A / FLAME SPREAD: N/A	ELEVATOR CABS INTERIOR APPLIED WALL PANELS 1	
SF-5	PRIVADA BY BOBRICK GC TO PROVIDE INFO@PRIVADAPARTITIONS.COPM	PRODUCT: RESTROOM PARTITIONS WITH CONCEALED FRAME AND MOUNTING BRACKETS CONFIGURATION: FLOOR ANCHORED, OVERHEAD-BRACED (SEE PLANS & ELEVATIONS FOR DETAILS) HIGH PRESSURE LAMINATE FINISH: WILSONART - WALNUT HEIGHTS - 7965-07 - TEXTURED GLOSS FINISH PEDESTAL / HARDWARE FINISH: 304 STAINLESS STEEL PARTITION PANEL HEIGHT: 6'-0" H / PEDESTAL HEIGHT: 9" H FINISHED THICKNESS: 1" D FIRE RESISTANCE: ASTM E-84 - CLASS B PRIVACY: LINE OF SIGHT BLOCKED AT ALL CONNECTION POINTS, TYP. NOTES: • GC TO PROVIDE SHOP DRAWINGS FOR REVIEW AND APPROVAL PRIOR TO FABRICATION AND INSTALLATION • GC TO PROVIDE FINISH SAMPLES FOR REVIEW AND APPROVAL PRIOR TO FABRICATION AND INSTALLATION • GC TO ENSURE APPROPRIATE BLOCKING IS PROVIDED AT WALL CONNECTION POINTS	PUBLIC RESTROOMS - LOBBY RESTROOMS - MEETING ROOM RESTROOMS	INSPIRATIONAL IMAGE: FINISH IMAGE:

POWER SUPPLY

KEY	MANUFACTURER	DESCRIPTION	LOCATION	IMAGE
PS-1	JUNIPER DESIGN GROUP 347.799.2915 SALES@JUNIPER-DESIGN.COM WWW.JUNIPER-DESIGN.COM	PRODUCT TYPE: JUNIPER GROUND CONTROL POWER SUPPLY TO INCLUDE (1) DOUBLE USB, (1) POWER OUTLET, & (1) UNIFYING PLATE FINISH: SATIN BRASS **6-8 WEEK TYPICAL LEAD TIME - MILLWORK FABRICATOR TO ENSURE THIS ITEM IS ORDERED SUPPLIED WITHIN TYPICAL MILLWORK LEAD TIME**	FACE OF BAR	

ACOUSTICAL CEILING TILE

TAG	MANUFACTURER	INFORMATION	LOCATION	IMAGE
ACT-01	ARMSTRONG CIBLING & WALL SOLUTIONS EMILY R. EBENBEE 1.717.396.6279 ERBEENBBE@ARMSTRONGCIBLINGS.COM	PRODUCT: WOODWORKS LINEAR VENEERED PLANKS PATTERN: NATURAL VARIATIONS (REAL WOOD VENEERS) 6440W1 COLOR: WALNUT (NWN) ACOUSTIC RATING: 0.45 SIZE: 4.1'W x 2'L X 9/16"H FIRE RATING: CLASS A ASTM E84 FLAME SPREAD INDEX: 25 OR LESS SMOKE DEVELOPED: 50 OR LESS	LOBBY LOUNGE & RESTAURANT CIBLING	
ACT-02	ABOVE VIEW ARTISAN CIBLING TILES GRANT GIBBS 404.394.6105 GRANT@DA-ATL.COM	PRODUCT TYPE: DECORATIVE DIMENSIONAL CIBLING TILE MODEL NUMBER: PYRAMID UTILITY & PYRAMID 2 MATERIAL: GYPSUM, GLASS FIBERS, AND OTHER NON-COMBUSTIBLE AGGREGATES TILE SIZE: 24" x 24" COLOR: WHITE SATIN LATEX PAINT FIRE RATING: ASTM CLASS A, ZERO SMOKE SPREAD, FLAME SPREAD & FUEL CONTRIBUTION INSTALLATION: DROP INTO ANY STANDARD CONVENTIONAL 15/16 INCH T-BAR SUSPENSION GRID, CONSISTING OF PRE-PUNCHED ROLL-FORMED STEEL WITH EXPOSED FLANGE SURFACE NOTES: • ALL CIBLING FIXTURES, SPRINKLERS, & OTHER CIBLING ITEMS TO BE INSTALLED IN PYRAMID UTILITY TILE • GRID NOT INCLUDED. GC TO PROVIDE T-BAR SUSPENSION GRID, CONSISTING OF PRE-PUNCHED ROLL-FORMED STEEL WITH EXPOSED FLANGE SURFACE. MAIN RUNNERS AND CROSS RUNNERS SHALL BE INSTALLED TO FORM 2' X 2' SQUARE OPENINGS. THE GRID SHALL BE HUNG FLAT AND LEVEL, SUSPENDED BY 12 GAUGE PRE-STRAIGHTENED STEEL WIRE @ 4' O.C.	MEETING ROOM ACCENT CIBLING,STUDIO ACCENT CIBLING & BOH CONFERENCE ROOM POP-UP	
ACT-3	ARMSTRONG CIBLING & WALL SOLUTIONS EMILY R. EBENBEE 1.717.396.6279 ERBEENBBE@ARMSTRONGCIBLINGS.COM	PRODUCT: ARMSTRONG ULTIMA - 1437 COLOR: WHITE (WH) PANEL SIZE: 24' x 72' / THICKNESS: 3/4" MATERIAL: GYPSUM EDGE: BEVELED TEGULAR 9/16" GRID: 9/16' SUPRAFINE GRID ACOUSTICS: 0.75 NRC/35 CAC FIRE RATING: ASTM CLASS A, ZERO SMOKE SPREAD, FLAME SPREAD & FUEL CONTRIBUTION	FITNESS CENTER	
ACT-4	ARMSTRONG CIBLING & WALL SOLUTIONS EMILY R. EBENBEE 1.717.396.6279 ERBEENBBE@ARMSTRONGCIBLINGS.COM	PRODUCT: ARMSTONG CIRRUS HIGH NRC 558 COLOR: WHITE (WH) PANEL SIZE: 24' x 24' / THICKNESS: 7/8' MATERIAL: GYPSUM EDGE: BEVELED TEGULAR 9/16" GRID: 9/16' SUPRAFINE GRID ACOUSTICS: 0.75 NRC/35 CAC FIRE RATING: CLASS A ASTM E84 FLAME SPREAD INDEX: 25 OR LESS SMOKE DEVELOPED: 50 OR LESS	PUBLIC AREAS -CORRIDOR @ BOH OFFICES, BOH OFFICES & COAT CLOSET	
ACT-5	ARMSTRONG CIBLING & WALL SOLUTIONS EMILY R. EBENBEE 1.717.396.6279 ERBEENBBE@ARMSTRONGCIBLINGS.COM	PRODUCT: ARMSTONG FINE FISSURED 928 COLOR: WHITE (WH) PANEL SIZE: 24' x 24' / THICKNESS: 7/8' MATERIAL: GYPSUM EDGE: SQUARE EDGE (VISIBLE GRID) GRID: PRELUDE XL 15/16' GRID ACOUSTICS: 0.75 NRC/35 CAC FIRE RATING: CLASS A ASTM E84 FLAME SPREAD INDEX: 25 OR LESS SMOKE DEVELOPED: 50 OR LESS	ALL OTHER BACK OF HOUSE AREAS, STORAGE ROOMS, & KITCHEN MANAGERS OFFICE	

MOULDINGS

TAG	MANUFACTURER	INFORMATION	LOCATION	IMAGE
MD-1	ORAC DECOR BY OUTWATER OR EQUAL CUSTOMER SERVICE 800.835.4400	PRODUCT: PANEL MOULDING MODEL NUMBER: SX168 FINISH: PRIMED WHITE COLOR: SEE ELEVATION FOR DETAILS SIZE: 5 5/8" H x 78 3/4" L PROJECTION: 2 CONSTRUCTION: DUROPOLYMER FIRE RATING: CLASS A ASTM E84	BALLROOM CUPOLA CIBLING	
CM-1	ORAC DECOR BY OUTWATER OR EQUAL CUSTOMER SERVICE 800.835.4400	PRODUCT: CROWN MOULDING FOR INDIRECT LIGHTING MODEL NUMBER: CS58 FINISH: PRIMED WHITE COLOR: SEE ELEVATION FOR DETAILS SIZE: 2 1/4" H x 78 3/4" L FACE: 6" H PROJECTION: 5 1/2" CONSTRUCTION: POLYURETHANE FIRE RATING: CLASS A ASTM E84	BALLROOM CUPOLA CIBLING	

CORNER GUARDS

TAG	MANUFACTURER	INFORMATION	LOCATION	COLOR	IMAGE
CG-04	INPRO CORPORATION ERIN STATWICKI 262.679.9010 ext. 5165 estawicki@inprocorp.com	PRODUCT TYPE: 1/2" x FULL HEIGHT TAPE ON CORNER GUARD FIRE PERFORMANCE CHARACTERISTICS: NFPA CLASS A FIRE RATING, SURFACE BURNING CHARACTERISTICS, AS DETERMINED BY ASTM E-84,	WC-12 - OVERALL LOBBY (UNO) WC-10 - BALLROOM & MEETING ROOMS WC-11 - PUBLIC RESTROOMS	0238 FEATHER (WHITE)	PRODUCT DIAGRAM: FINISH IMAGE:
CG-05	INPRO CORPORATION ERIN STATWICKI 262.679.9010 ext. 5165 estawicki@inprocorp.com	PRODUCT TYPE: 1/2" x FULL HEIGHT TAPE ON CORNER GUARD FIRE PERFORMANCE CHARACTERISTICS: NFPA CLASS A FIRE RATING, SURFACE BURNING CHARACTERISTICS, AS DETERMINED BY ASTM E-84,	WC-14 - PRE-FUNCTION (UNO)	0154 CLAM SHELL (CREAM)	PRODUCT DIAGRAM: FINISH IMAGE:
CG-06	INPRO CORPORATION ERIN STATWICKI 262.679.9010 ext. 5165 estawicki@inprocorp.com	PRODUCT TYPE: FLUSH MOUNT RIGID VINYL CORNER GUARD WITH CONTINUOUS ALUMINUM RETAINER MODEL 160F / SIZE: 2" x 2" x FULL HEIGHT FIRE PERFORMANCE CHARACTERISTICS: NFPA CLASS A FIRE RATING, SURFACE BURNING CHARACTERISTICS, AS DETERMINED BY ASTM E-84	PRE-FUNCTION COLUMN ADJACENT TO BALLROOM	0121 SADDLE (BROWN)	PRODUCT DIAGRAM: FINISH IMAGE:
CG-07	THE CORNER GUARD STORE CUSTOMER SERVICE 800.514.4036 www.thecornerguardstore.com	PRODUCT TYPE: 1/2" x 120" 90 DEGREE MUNTZ BRASS CORNER GUARD SURFACE MOUNTED USING POLYURETHANE BASED CONSTRUCTION ADHESIVE FIRE PERFORMANCE CHARACTERISTICS: NFPA CLASS A FIRE RATING, SURFACE BURNING CHARACTERISTICS, AS DETERMINED BY ASTM E-84	TRANSITION BETWEEN WC-5 & WC-12 AT START OF PREFUNCTION, TRANSITION BETWEEN WC-12 & WC-14 AT PREFUNCTION	SATIN #4 (BRUSHED) BRASS MODEL: CG-BA-040-1201.5-90	PRODUCT DIAGRAM: FINISH IMAGE:
CG-08	INPRO CORPORATION ERIN STATWICKI 262.679.9010 ext. 5165 estawicki@inprocorp.com	PRODUCT TYPE: 1/2" x FULL HEIGHT TAPE ON CORNER GUARD FIRE PERFORMANCE CHARACTERISTICS: NFPA CLASS A FIRE RATING, SURFACE BURNING CHARACTERISTICS, AS DETERMINED BY ASTM E-84,	WC-15 - FITNESS CENTER	0258 CHINO (BEIGE)	PRODUCT DIAGRAM: FINISH IMAGE:

4ZIA ARCHITECTS
4031 University Drive, Suite 100, Fairfax, VA. 22030
Telephone: (703)352-1933 Fax: (703)691-9171

266 Crescent Circle SW., Marietta, GA 30064
Office: (770)424-8419 | Project Manager Cell: (404)909-2529

THIS DRAWING & THE DESIGN SHOWN THEREON ARE THE PROPERTY OF DHA ARCHITECTS. THE REPRODUCTION, COPYING, OR USE OF THIS DRAWING WITH OUT THEIR SPECIFIC WRITTEN CONSENT IS PROHIBITED & ANY INFRINGEMENT WILL BE SUBJECT TO LEGAL ACTION.

DESIGN DIRECTIONS INTERNATIONAL

THIS DRAWING IS THE PROPERTY OF DESIGN DIRECTIONS INTERNATIONAL AND IS NOT TO BE REPRODUCED OR COPIED WHOLE OR IN PART. IT IS ONLY TO BE USED FOR THE PROJECT AND SITE SPECIFICALLY INTENDED HERein, AND IS NOT TO BE USED ON ANY OTHER PROJECT. IT IS TO BE RETURNED UPON REQUEST. SCALES AS STATED HEREON ARE VAILD ON THE ORIGINAL DRAWING. THE DIMENSIONS OF WHICH ARE 30" X 42" INCHES.

CLIENT:
CHANTILLY HOTEL, LLC.
4335 CHANTILLY SHOPPING CENTER.
CHANTILLY, VA 20151

ISSUES/REVISIONS			
NO.	DATE:	REMARKS:	
	10/26/2020	BID DOCUMENT SET	
1	11/3/2020	BID DOCUMENT SET REVISIONS	
2	1/4/2021	DESIGN REVIEW REVISIONS	

PROJECT NAME:
CROWNE PLAZA® HOTELS & RESORTS
4335 CHANTILLY SHOPPING CENTER
CHANTILLY, VA

DRAWING NAME
PUBLIC AREA FINISH SCHEDULE CONTINUED

SCALE	PROJECT NO.
AS NOTED	1903
DRAWN BY	DATE
KAK & DVE	10.2.2020

DRAWING NO.
ID-008

PUBLIC AREA PLUMBING SCHEDULE

KEY/QTY	DESCRIPTION	MODEL	FINISH	MANUFACTURER	AREA	LOCATION	IMAGE
TA-1 QTY:14	SINGLE HANDLE SINK FAUCET-DECK MOUNTED INCLUDED POP-UP DRAIN DRAIN OPERATES BY VERTICAL SLIDE RED/BLUE INDICATOR MARKINGS	576-MPU-LHP-DST, STRYKE BATH COLLECTION 3 7/16"W x 6 13/16"H, SPOUT LENGTH 3 15/16" 1.2 GPM SINK DRAIN & TAILPIECE INCLUDED SINGLE HOLE INSTALLATION	CHAMPAGNE BRONZE	DELTA TESKA MCCART TM@EPULLEY.COM WORK: 770.425.0706 CELL: 77.235.1031	PUBLIC RESTROOMS	VANITY @ PUBLIC RESTROOMS MIN 2 1/2" TO BACKSPLASH SPOUT CLEARANCE 4 13/16"W X 5 7/16"H	
TA-2 QTY: 11	SOAP DISPENSER 13 OZ BOTTLE REFILLABLE FROM ABOVE DECK FITS HOLE: 1 3/8" +/- 1/8"	RP101188 2 1/4"W x 2 5/8"H, SPOUT LENGTH 3 3/4" TOTAL HEIGHT: 10 3/8" 2 1/4" SQUARE X 1 1/8" DIA 3" MAX DECK THICKNESS	CHAMPAGNE BRONZE	DELTA TESKA MCCART TM@EPULLEY.COM WORK: 770.425.0706 CELL: 77.235.1031	PUBLIC RESTROOMS	VANITY @ PUBLIC RESTROOMS	
TA-3 QTY: 11	EDGEMERE RECTANGULAR UNDER MOUNT COUNTER SINK MEETS ADA STANDARDS UNGLAZED RIM FRONT OVERFLOW SUPPLIED WITH MOUNTING KIT & TEMPLATE	0545.000 OAD: 18 1/2" X 16 1/8" BOWL: 16 3/4"W X 14 3/8" FRONT TO BACK X 3" DEEP	WHITE	AMERICAN STANDARD JENNIFER HUMPHREY JENNIFER.HUMPHREY@LIXIL.COM CELL: 312.918.8142	PUBLIC RESTROOMS EMPLOYEE RESTROOM FITNESS CENTER TOILET	VANITY @ ALL PUBLIC RESTROOMS	
TA-4 QTY: 30	TISSUE HOLDER STRYKE BATH COLLECTION MOUNTING HARDWARE & TEMPLATE INCLUDED PIVOTING ARM	77655 9 3/4"W x 3 3/8"D x 2 1/8"H MOUNTING TEMPLATE 7 5/8"W	CHAMPAGNE BRONZE	DELTA TESKA MCCART TM@EPULLEY.COM WORK: 770.425.0706 CELL: 77.235.1031	PUBLIC RESTROOMS	VANITY @ PUBLIC RESTROOMS *WOOD BLOCKING IS PREFERRED IF NOT USE THESE FASTENERS: TILE/MASONARY-PLASTIC OR LEAD ANCHORS PLASTER/DRYWALL TOGGLE BOLTS	
TA-5 QTY: 7	18" ADA GRAB BARS CONTEMPORARY DESIGN MEETS ADA STANDARDS TO BE MOUNTED VERTICAL	41818 OAD: 21 1/2"W x 2 3/4"D x 3 1/2"H ROD: 1 1/4"ROUND	CHAMPAGNE BRONZE	DELTA TESKA MCCART TM@EPULLEY.COM WORK: 770.425.0706 CELL: 77.235.1031	PUBLIC RESTROOMS EMPLOYEE RESTROOMS FITNESS CENTER TOILET	ALL PUBLIC RESTROOM ADA STALLS	
TA-6 QTY: 7	36" ADA GRAB BARS CONTEMPORARY DESIGN MEETS ADA STANDARDS	41836 OAD: 39 1/2"W x 2 3/4"D x 3 1/2"H ROD: 1 1/4"ROUND	CHAMPAGNE BRONZE	DELTA TESKA MCCART TM@EPULLEY.COM WORK: 770.425.0706 CELL: 77.235.1031	PUBLIC RESTROOMS EMPLOYEE RESTROOMS FITNESS CENTER TOILET	ALL PUBLIC RESTROOM ADA STALLS	
TA-7 QTY: 8	42" ADA GRAB BARS CONTEMPORARY DESIGN MEETS ADA STANDARDS	41842 OAD: 45 1/2"W x 2 3/4"D x 3 1/2"H ROD: 1 1/4"ROUND	CHAMPAGNE BRONZE	DELTA TESKA MCCART TM@EPULLEY.COM WORK: 770.425.0706 CELL: 77.235.1031	PUBLIC RESTROOMS EMPLOYEE RESTROOMS FITNESS CENTER TOILET	ALL PUBLIC RESTROOM ADA STALLS	
TA-8 QTY: 2	RECESSED HORIZONTAL MOUNTED BABY CHANGING STATION	KB110-SSRE OAD: 37"W x 4"D x 23"H ROUGH WALL OPENING: 35 1/2"W x 20 1/2"H x 4 1/4" RECESSED DEPTH	STAINLESS STEEL	KOALA KARE TOLL FREE: 888.733.3456 303.539.8300	PUBLIC RESTROOMS	PUBLIC RESTROOM	
TA-9 QTY: 2	RECESSED WASTE RECEPTACLE WITH LINERMATE	B-43644 CONTURASERIES OAD: 15 1/4"W x 4 15/16"D x 27 3/4"H ROUGH WALL OPENING: 15 7/8"W x 26 1/4"H x 4" RECESSED DEPTH	STAINLESS STEEL	BOBRICK TOLL FREE: 888.733.3456 303.539.8300	PUBLIC RESTROOMS	PUBLIC RESTROOM	
TA-10 QTY: 12	AUTOMATIC WALL MOUNTED FOAM SOAP DISPENSER	B-2013 OAD: 4 1/4"W x 4 7/32"D x 9 9/16"H	STAINLESS STEEL	BOBRICK TOLL FREE: 888.733.3456 303.539.8300	EMPLOYEE RESTROOMS FITNESS CENTER TOILET	PUBLIC RESTROOM	

4JA ARCHITECTS
4501 University Drive, Suite 130, Fairfax, VA. 22030
Telephone: (703)352-1933 Fax: (703)349-9171

THIS DRAWING & THE DESIGN SHOWN THEREON ARE THE PROPERTY OF 2HA ARCHITECTS. THE REPRODUCTION, COPYING, OR USE OF THIS DRAWING WITH OUT THEIR SPECIFIC WRITTEN CONSENT IS PROHIBITED & ANY INFRINGEMENT WILL BE SUBJECT TO LEGAL ACTION.

DESIGN DIRECTIONS INTERNATIONAL
266 Crescent Circle SW., Marietta, GA 30064
Office: (770)424-8419 | Project Manager Cell: (404)909-2529

THIS DRAWING IS THE PROPERTY OF DESIGN DIRECTIONS INTERNATIONAL AND IS NOT TO BE REPRODUCED OR COPIED WHOLE OR IN PART. IT IS ONLY TO BE USED FOR THE PROJECT AND SITE SPECIFICALLY INTENDED HEREIN, AND IS NOT TO BE USED ON ANY OTHER PROJECT. IT IS TO BE RETURNED UPON REQUEST. SCALES AS STATED HEREON ARE VALID ON THE ORIGINAL DRAWING. THE DIMENSIONS OF WHICH ARE 30" X 42" INCHES.

CLIENT:
CHANTILLY HOTEL, LLC.
4335 CHANTILLY SHOPPING CENTER.
CHANTILLY, VA 20151

ISSUES/REVISIONS

NO.	DATE:	REMARKS:
	10/26/2020	BID DOCUMENT SET
1	11/3/2020	BID DOCUMENT SET REVISIONS
2	1/4/2021	DESIGN REVIEW REVISIONS

PROJECT NAME:
CROWNE PLAZA® HOTELS & RESORTS
4335 CHANTILLY SHOPPING CENTER
CHANTILLY, VA

DRAWING NAME
PUBLIC AREA
PLUMBING SCHEDULE

SCALE	PROJECT NO.
AS NOTED	1903
DRAWN BY	DATE
KAK & DVE	10.2.2020

DRAWING NO.
ID-009

PRICING SET ONLY | NOT ISSUED FOR CONSTRUCTION

PUBLIC AREA PLUMBING SCHEDULE CONTINUED

KEY/QTY	DESCRIPTION	MODEL	FINISH	MANUFACTURER	AREA	LOCATION	IMAGE
TA-11 QTY: 7	ENMOTION RECESSED AUTOMATED TOWEL DISPENSER HARD-WOUND ROLL TOWELS	59466 OAD: 13 1/2"W x 16.48"H x 7.75"D RECESSED DEPTH: 4" ROUGH WALL OPENING: 10.6"W x 15 1/2"H x 4" RECESSED DEPTH	STAINLESS STEEL	GEORGIA PACIFIC 1.866.435.5647	PUBLIC RESTROOMS	PUBLIC RESTROOMS	
TA-12 QTY: 21	DOUBLE ROBE HOOK STRYKE BATH COLLECTION MOUNTING HARDWARE & TEMPLATE INCLUDED	77638-CZ-B1 3 1/2"W x 3 3/8"D x 2 1/8"H MOUNTING TEMPLATE 5/8"W	CHAMPAGNE BRONZE	DELTA TESKA MCCART TM@EPULLEY.COM WORK: 770.425.0706 CELL: 77.235.1031	PUBLIC RESTROOMS	PUBLIC RESTROOMS	
TA-13 QTY: 3	WALL MOUNTED VANITY SINGLE FAUCET DECK INCLUDES OVERFLOW MEETS ADA STANDARDS	1819-1B-CWH OAD: 23 1/2"W x 18.3"D x 6.13"H BOWL: 18. 5/8"W X 10 1/2" FRONT TO BACK X 6 3/32" DEEP	WHITE (CWH)	DECOLAV 886.332.6528 INFO@DECOLAV.COM	EMPLOYEE RESTROOM FITNESS CENTER TOILET	VANITY @ PUBLIC RESTROOMS	
TA-14 QTY: 1	EZH2O BOTTLE FILLING STATION WITH INTEGRAL SWIRLFLO FOUNTAIN REFRIGERATED FILTERED WALL MOUNTED 115V POWER, FLEXI-GUARD SAFETY BUBBLER 8.0GPH CHILLING OPTION 1 FULL LOAD AMPS	LZWS-LRPBM28K OAD: 38 1/2"L x 19"W x 55 1/16"H ROUGH WALL OPENING: 37 1/2"W x 52 1/8"H 4 1/2" AFF- ABOVE FLOOR LINE	STAINLESS STEEL	ELKAY 800.476.4106 CUSTOMERCARE@ELKAY.COM	PUBLIC RESTROOM @ MEETING ROOM FITNESS CENTER	PUBLIC RESTROOM VESTIBULE INSIDE FITNESS CENTER	
TA-15 QTY: 7	RECESSED TOILET-SEAT-COVER DISPENSER	B-3013 OAD: 17 9/16"W X 13 1/16"H ROUGH WALL OPENING: 15 7/8"W X 11 7/16"H X 2 3/4" MIN. RECESSED DEPTH MOUNT 48"H TO THE DISPENSER SLOT FOR ADA	STAINLESS STEEL	BOBRICK TOLL FREE: 888.733.3456 303.539.8300	PUBLIC RESTROOMS	PUBLIC RESTROOM	
TA-16 QTY: 2	RECESSED SANITARY NAPKIN DISPOSAL-FOR ONE STALL	B-4353 OAD: 12 3/4"W X 1 5/16"D X 11"H ROUGH WALL OPENING: 11 1/4"W X 9 1/2"H X 4" MIN. RECESSED DEPTH	STAINLESS STEEL	BOBRICK TOLL FREE: 888.733.3456 303.539.8300	PUBLIC RESTROOMS	PUBLIC RESTROOM	
TA-17 QTY: 3	PARTITION MOUNTED SANITARY NAPKIN DISPOSAL-FOR TWO TOILET COMPARTMENTS	B-4354 OAD: 12 3/4"W X 1 5/16"D X 11"H ROUGH WALL OPENING: 11 1/4"W X 9 1/2"H X 4" MIN. RECESSED DEPTH	STAINLESS STEEL	BOBRICK TOLL FREE: 888.733.3456 303.539.8300	PUBLIC RESTROOMS	PUBLIC RESTROOM	
TA-18 QTY: 2	24" ADA GRAB BARS CONTEMPORARY DESIGN MEETS ADA STANDARDS TO BE MOUNTED VERTICAL	41824 OAD: 27 1/2"W x 2 3/4"D x 3 1/2"H ROD: 1 1/4"ROUND	CHAMPAGNE BRONZE	DELTA TESKA MCCART TM@EPULLEY.COM WORK: 770.425.0706 CELL: 77.235.1031	PUBLIC RESTROOMS	PUBLIC RESTROOM ADA STALL	

JHA ARCHITECTS
4501 University Drive, Suite 130, Fairfax, VA. 22030
Telephone: (703)352-1933 Fax: (703)691-9171

THIS DRAWING & THE DESIGN SHOWN THEREON ARE THE PROPERTY OF JHA ARCHITECTS. THE REPRODUCTION, COPYING, OR USE OF THIS DRAWING WITH OUT THEIR SPECIFIC WRITTEN CONSENT IS PROHIBITED & ANY INFRINGEMENT WILL BE SUBJECT TO LEGAL ACTION.

DESIGN DIRECTIONS INTERNATIONAL
266 Crescent Circle SW., Marietta, GA 30064
Office: (770)424-8419 | Project Manager Cell: (404)909-2529

THIS DRAWING IS THE PROPERTY OF DESIGN DIRECTIONS INTERNATIONAL AND IS NOT TO BE REPRODUCED OR COPIED WHOLE OR IN PART. IT IS ONLY TO BE USED FOR THE PROJECT AND SITE SPECIFICALLY INTENDED HEREIN, AND IS NOT TO BE USED ON ANY OTHER PROJECT. IT IS TO BE RETURNED UPON REQUEST. SCALES AS STATED HEREON ARE VALID ON THE ORIGINAL DRAWING. THE DIMENSIONS OF WHICH ARE 30" X 42" INCHES.

CLIENT:
CHANTILLY HOTEL, LLC.
4335 CHANTILLY SHOPPING CENTER,
CHANTILLY, VA 20151

ISSUES/REVISIONS

NO.	DATE:	REMARKS:
	10/26/2020	BID DOCUMENT SET
1	11/3/2020	BID DOCUMENT SET REVISIONS
2	1/4/2021	DESIGN REVIEW REVISIONS

PROJECT NAME:
CROWNE PLAZA® HOTELS & RESORTS
4335 CHANTILLY SHOPPING CENTER
CHANTILLY, VA

DRAWING NAME
PUBLIC AREA CONTINUE PLUMBING SCHEDULE

SCALE	PROJECT NO.
AS NOTED	1903
DRAWN BY	DATE
KAK & DVE	10.2.2020

DRAWING NO.
ID-010

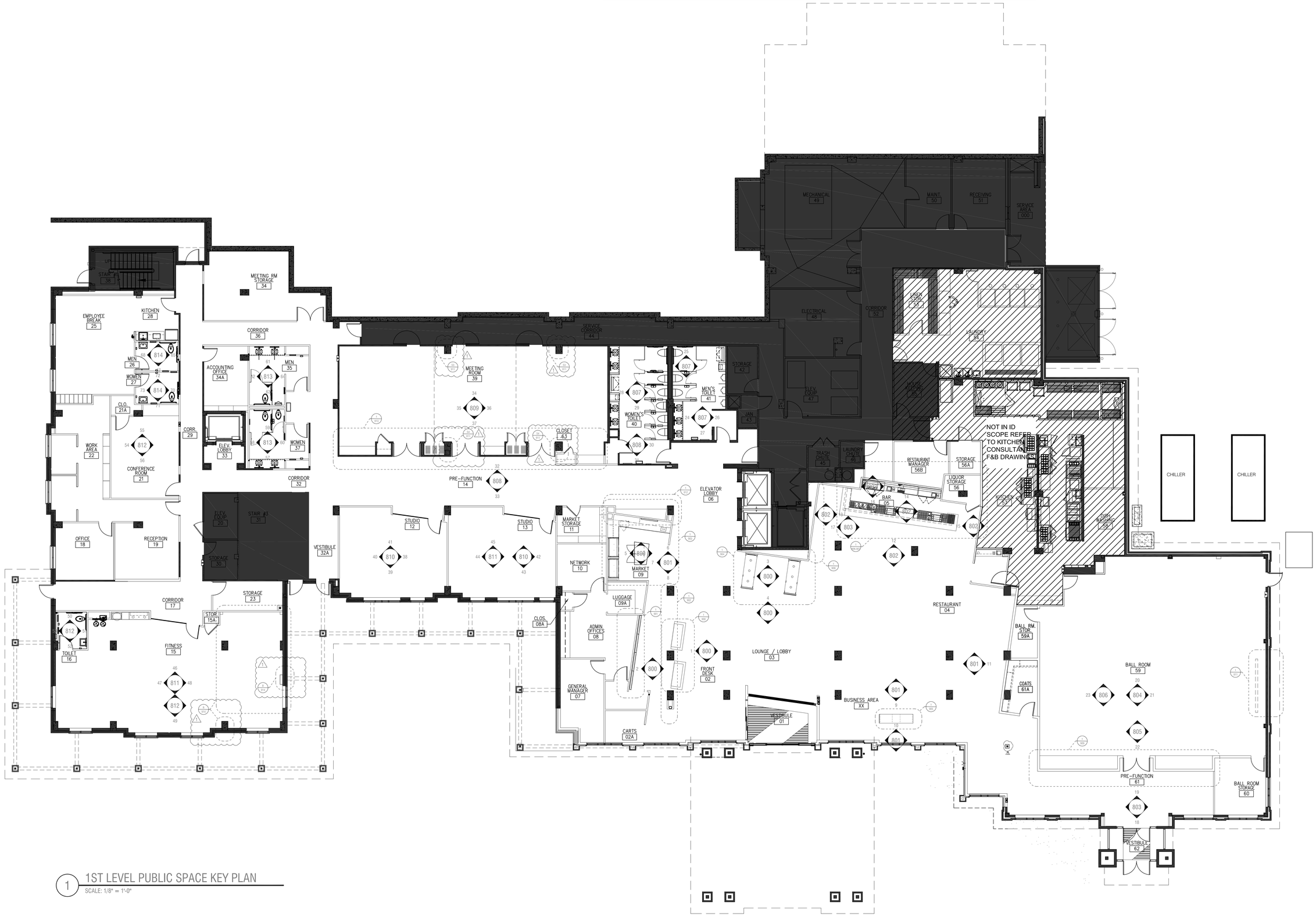

1 1ST LEVEL PUBLIC SPACE KEY PLAN

SCALE: 1/8" = 1'-0"

4JA ARCHITECTS
4501 University Drive, Suite 130, Fairfax, VA. 22030
Telephone: (703)352-1933 Fax: (703)691-9171

THIS DRAWING & THE DESIGN SHOWN THEREON ARE THE PROPERTY OF 3HA ARCHITECTS. THE REPRODUCTION, COPYING, OR USE OF THIS DRAWING WITH OUT THEIR SPECIFIC WRITTEN CONSENT IS PROHIBITED & ANY INFRINGEMENT WILL BE SUBJECT TO LEGAL ACTION.

DESIGN DIRECTIONS INTERNATIONAL
266 Crescent Circle SW., Marietta, GA 30064
Office: (770)424-8419 | Project Manager Cell: (404)909-2529

THIS DRAWING IS THE PROPERTY OF DESIGN DIRECTIONS INTERNATIONAL AND IS NOT TO BE REPRODUCED OR COPIED WHOLE OR IN PART. IT IS ONLY TO BE USED FOR THE PROJECT AND SITE SPECIFICALLY INTENDED HEREIN, AND IS NOT TO BE USED ON ANY OTHER PROJECT. IT IS TO BE RETURNED UPON REQUEST. SCALES AS STATED HEREON ARE VALID ON THE ORIGINAL DRAWING. THE DIMENSIONS OF WHICH ARE 30" X 42" INCHES.

CLIENT:
CHANTILLY HOTEL, LLC.
4335 CHANTILLY SHOPPING CENTER,
CHANTILLY, VA 20151

ISSUES/REVISIONS

NO.	DATE:	REMARKS:
	10/26/2020	BID DOCUMENT SET
1	11/3/2020	BID DOCUMENT SET REVISIONS
2	1/4/2021	DESIGN REVIEW REVISIONS

PROJECT NAME:
CROWNE PLAZA® HOTELS & RESORTS
4335 CHANTILLY SHOPPING CENTER
CHANTILLY, VA

DRAWING NAME
1ST LEVEL PUBLIC SPACE - KEY PLAN

SCALE	PROJECT NO.
AS NOTED	1903
DRAWN BY	DATE
KAK & DVE	10.2.2020

DRAWING NO.
ID-100

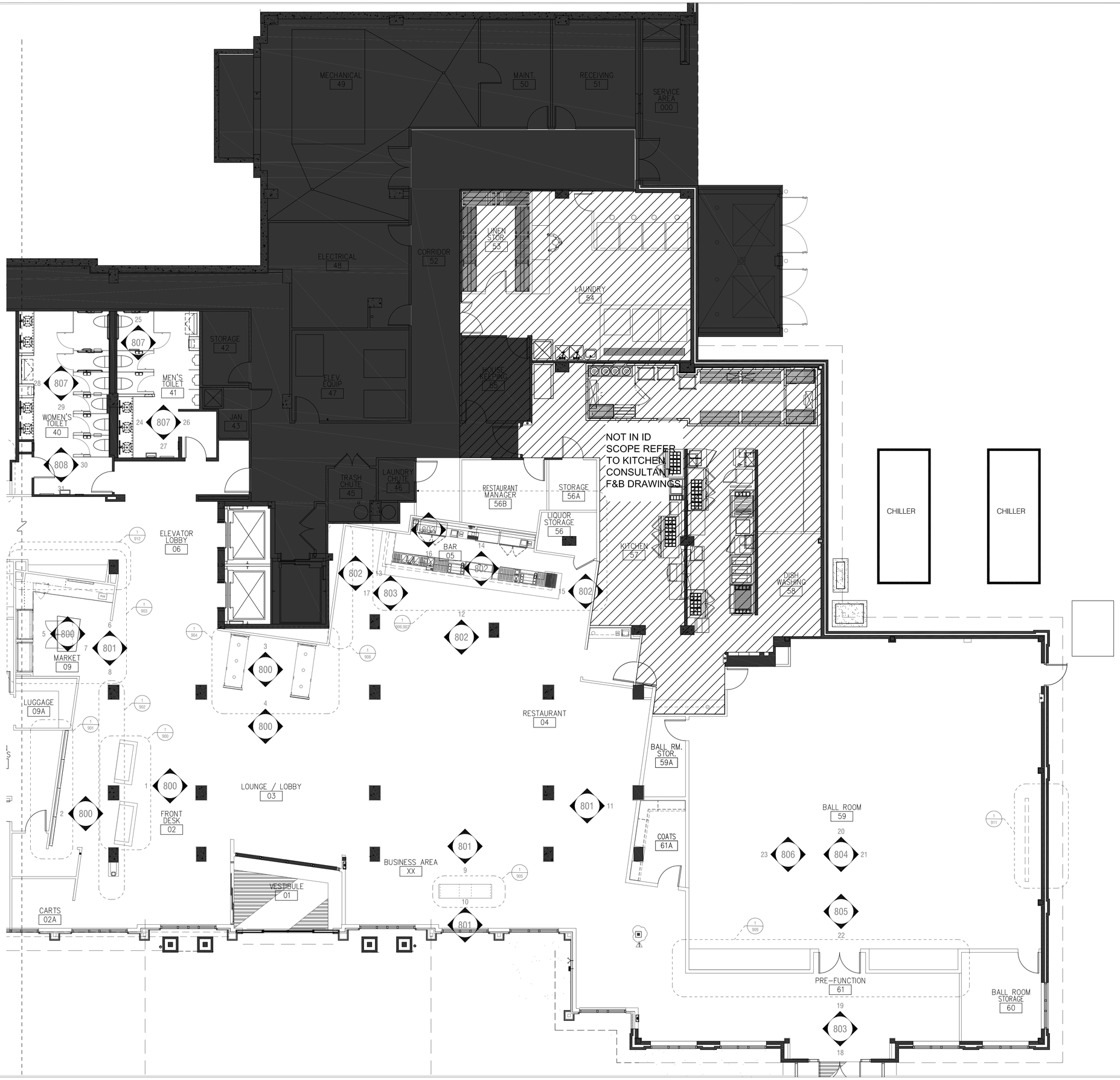

4JA ARCHITECTS
4551 University Drive, Suite 130, Fairfax, VA. 22030
Telephone: (703)352-1933 Fax: (703)591-9171

THIS DRAWING & THE DESIGN SHOWN THEREON ARE THE PROPERTY OF 3HA ARCHITECTS. THE REPRODUCTION, COPYING, OR USE OF THIS DRAWING WITH OUT THEIR SPECIFIC WRITTEN CONSENT IS PROHIBITED & ANY INFRINGEMENT WILL BE SUBJECT TO LEGAL ACTION.

DESIGN DIRECTIONS INTERNATIONAL
266 Crescent Circle SW., Marietta, GA 30064
Office: (770)424-8419 | Project Manager Cell: (404)909-2529

THIS DRAWING IS THE PROPERTY OF DESIGN DIRECTIONS INTERNATIONAL AND IS NOT TO BE REPRODUCED OR COPIED WHOLE OR IN PART. IT IS ONLY TO BE USED FOR THE PROJECT AND SITE SPECIFICALLY INTENDED HEREIN, AND IS NOT TO BE USED ON ANY OTHER PROJECT. IT IS TO BE RETURNED UPON REQUEST. SCALES AS STATED HEREON ARE VALID ON THE ORIGINAL DRAWING. THE DIMENSIONS OF WHICH ARE 30" X 42" INCHES.

CLIENT:
CHANTILLY HOTEL, LLC.
4335 CHANTILLY SHOPPING CENTER,
CHANTILLY, VA 20151

ISSUES/REVISIONS

NO.	DATE:	REMARKS:
	10/26/2020	BID DOCUMENT SET
1	11/3/2020	BID DOCUMENT SET REVISIONS
2	1/4/2021	DESIGN REVIEW REVISIONS

PROJECT NAME:
CROWNE PLAZA HOTELS & RESORTS
4335 CHANTILLY SHOPPING CENTER
CHANTILLY, VA

DRAWING NAME
ENLARGED LOBBY & BALL ROOM- KEY PLAN

SCALE	PROJECT NO.
AS NOTED	1903
DRAWN BY	DATE
KAK & DVE	10.2.2020

DRAWING NO.
ID-100A



4JA ARCHITECTS
4501 University Drive, Suite 130, Fairfax, VA. 22030
Telephone: (703)352-1933 Fax: (703)591-9171

THIS DRAWING & THE DESIGN SHOWN THEREON ARE THE PROPERTY OF 3HA ARCHITECTS. THE REPRODUCTION, COPYING, OR USE OF THIS DRAWING WITH OUT THEIR SPECIFIC WRITTEN CONSENT IS PROHIBITED & ANY INFRINGEMENT WILL BE SUBJECT TO LEGAL ACTION.

DESIGN DIRECTIONS INTERNATIONAL
266 Crescent Circle SW., Marietta, GA 30064
Office: (770)424-8419 | Project Manager Cell: (404)909-2529

THIS DRAWING IS THE PROPERTY OF DESIGN DIRECTIONS INTERNATIONAL AND IS NOT TO BE REPRODUCED OR COPIED WHOLE OR IN PART. IT IS ONLY TO BE USED FOR THE PROJECT AND SITE SPECIFICALLY INTENDED HEREIN, AND IS NOT TO BE USED ON ANY OTHER PROJECT. IT IS TO BE RETURNED UPON REQUEST. SCALES AS STATED HEREON ARE VALID ON THE ORIGINAL DRAWING. THE DIMENSIONS OF WHICH ARE 30" X 42" INCHES.

CLIENT:
CHANTILLY HOTEL, LLC.
4335 CHANTILLY SHOPPING CENTER,
CHANTILLY, VA 20151

ISSUES/REVISIONS

NO.	DATE:	REMARKS:
	10/26/2020	BID DOCUMENT SET
1	11/3/2020	BID DOCUMENT SET REVISIONS
2	1/4/2021	DESIGN REVIEW REVISIONS

PROJECT NAME:
CROWNE PLAZA® HOTELS & RESORTS
4335 CHANTILLY SHOPPING CENTER
CHANTILLY, VA

DRAWING NAME
ENLARGED MEETING SPACE,FITNESS & BOH- KEY PLAN

SCALE	PROJECT NO.
AS NOTED	1903
DRAWN BY	DATE
KAK & DVE	10.2.2020

DRAWING NO.
ID-100B

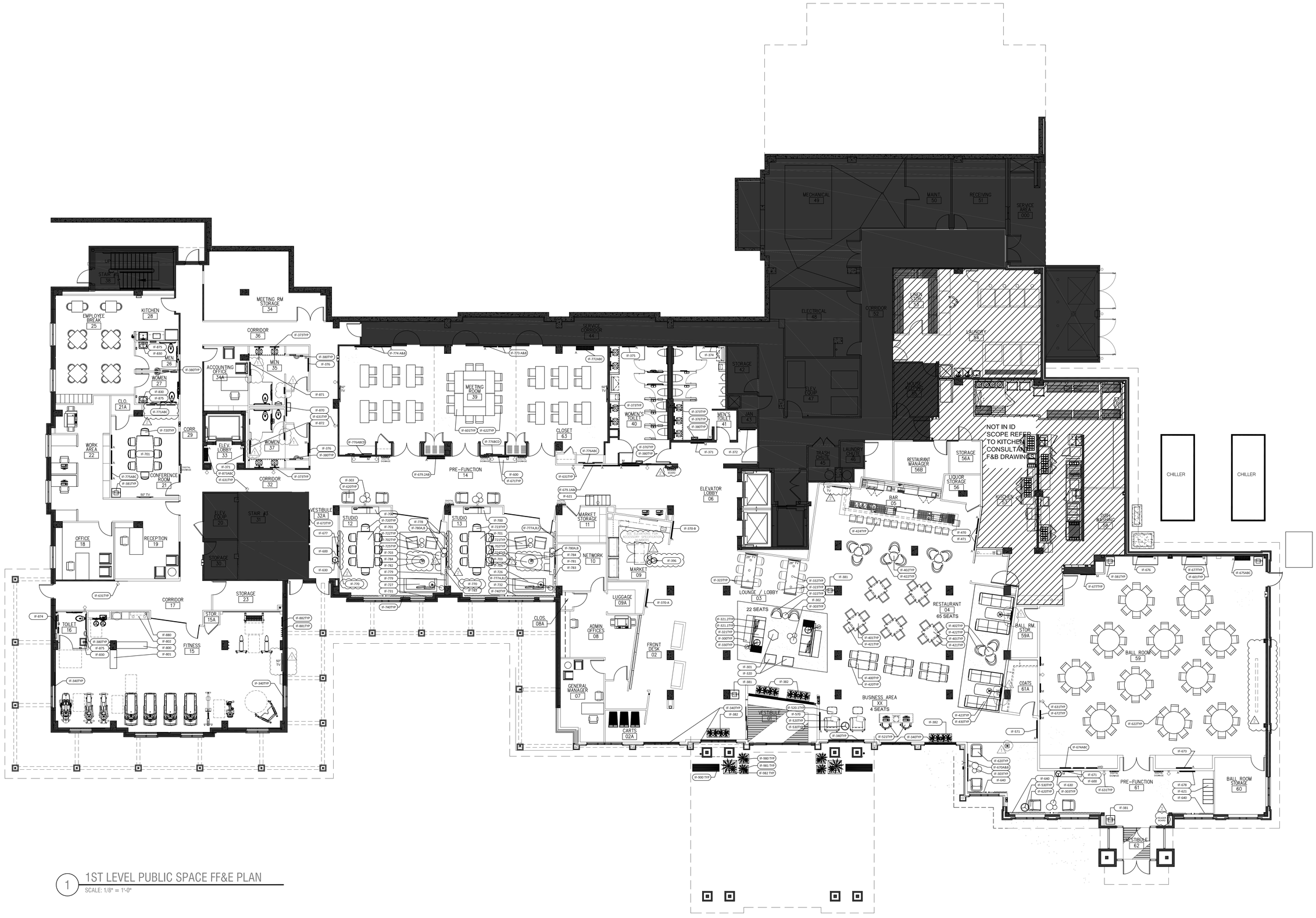

1 1ST LEVEL PUBLIC SPACE FF&E PLAN

SCALE: 1/8" = 1'-0"

JHA ARCHITECTS
4501 University Drive, Suite 130, Fairfax, VA. 22030
Telephone: (703)352-1933 Fax: (703)691-9171

THIS DRAWING & THE DESIGN SHOWN THEREON ARE THE PROPERTY OF JHA ARCHITECTS. THE REPRODUCTION, COPYING, OR USE OF THIS DRAWING WITH OUT THEIR SPECIFIC WRITTEN CONSENT IS PROHIBITED & ANY INFRINGEMENT WILL BE SUBJECT TO LEGAL ACTION.

DESIGN DIRECTIONS INTERNATIONAL
266 Crescent Circle SW., Marietta, GA 30064
Office: (770)424-8419 | Project Manager Cell: (404)909-2529

THIS DRAWING IS THE PROPERTY OF DESIGN DIRECTIONS INTERNATIONAL AND IS NOT TO BE REPRODUCED OR COPIED WHOLE OR IN PART. IT IS ONLY TO BE USED FOR THE PROJECT AND SITE SPECIFICALLY INTENDED HEREIN, AND IS NOT TO BE USED ON ANY OTHER PROJECT. IT IS TO BE RETURNED UPON REQUEST. SCALES AS STATED HEREON ARE VALID ON THE ORIGINAL DRAWING. THE DIMENSIONS OF WHICH ARE 30" X 42" INCHES.

CLIENT:
CHANTILLY HOTEL, LLC.
4335 CHANTILLY SHOPPING CENTER,
CHANTILLY, VA 20151

ISSUES/REVISIONS

NO.	DATE:	REMARKS:
	10/26/2020	BID DOCUMENT SET
1	11/3/2020	BID DOCUMENT SET REVISIONS
2	1/4/2021	DESIGN REVIEW REVISIONS

PROJECT NAME:
CROWNE PLAZA® HOTELS & RESORTS
4335 CHANTILLY SHOPPING CENTER
CHANTILLY, VA

DRAWING NAME
1ST LEVEL PUBLIC SPACE - FF&E PLAN

SCALE	PROJECT NO.
AS NOTED	1903
DRAWN BY	DATE
KAK & DVE	10.2.2020

DRAWING NO.
ID-101

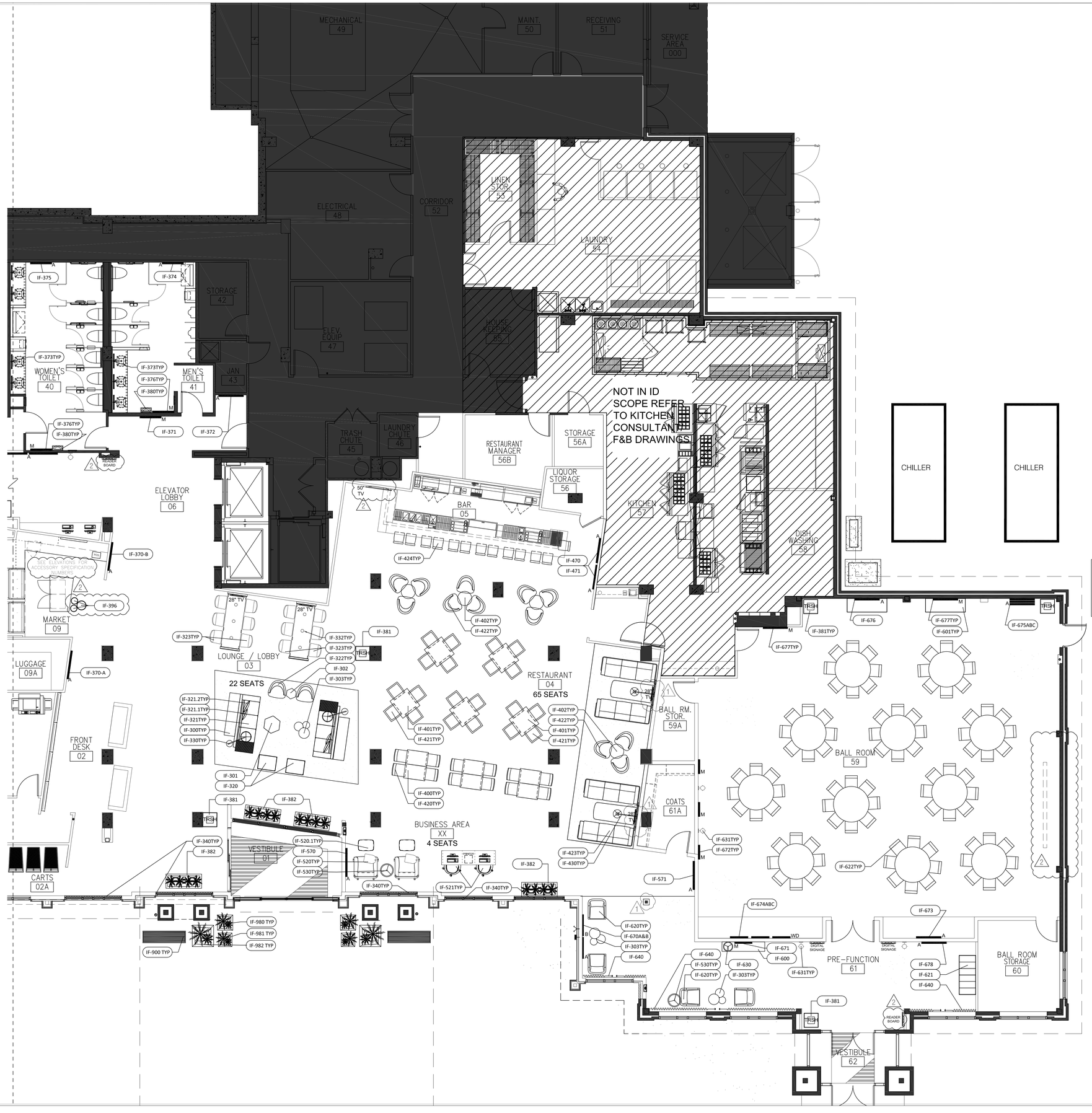

4JA ARCHITECTS
4501 University Drive, Suite 130, Fairfax, VA. 22030
Telephone: (703)352-1933 Fax: (703)591-9171

THIS DRAWING & THE DESIGN SHOWN THEREON ARE THE PROPERTY OF 3HA ARCHITECTS. THE REPRODUCTION, COPYING, OR USE OF THIS DRAWING WITH OUT THEIR SPECIFIC WRITTEN CONSENT IS PROHIBITED & ANY INFRINGEMENT WILL BE SUBJECT TO LEGAL ACTION.

DESIGN DIRECTIONS INTERNATIONAL
266 Crescent Circle SW., Marietta, GA 30064
Office: (770)424-8419 | Project Manager Cell: (404)909-2529

THIS DRAWING IS THE PROPERTY OF DESIGN DIRECTIONS INTERNATIONAL AND IS NOT TO BE REPRODUCED OR COPIED WHOLE OR IN PART. IT IS ONLY TO BE USED FOR THE PROJECT AND SITE SPECIFICALLY INTENDED HEREIN, AND IS NOT TO BE USED ON ANY OTHER PROJECT. IT IS TO BE RETURNED UPON REQUEST. SCALES AS STATED HEREON ARE VALID ON THE ORIGINAL DRAWING. THE DIMENSIONS OF WHICH ARE 30" X 42" INCHES.

CLIENT:
CHANTILLY HOTEL, LLC.
4335 CHANTILLY SHOPPING CENTER,
CHANTILLY, VA 20151

ISSUES/REVISIONS

NO.	DATE:	REMARKS:
	10/26/2020	BID DOCUMENT SET
1	11/3/2020	BID DOCUMENT SET REVISIONS
2	1/4/2021	DESIGN REVIEW REVISIONS

PROJECT NAME:
CROWNE PLAZA® HOTELS & RESORTS
4335 CHANTILLY SHOPPING CENTER
CHANTILLY, VA

DRAWING NAME
ENLARGED LOBBY & BALL ROOM - FF&E PLAN

SCALE	PROJECT NO.
AS NOTED	1903
DRAWN BY	DATE
KAK & DVE	10.2.2020

DRAWING NO.
ID-101A



4IA ARCHITECTS
4501 University Drive, Suite 130, Fairfax, VA. 22030
Telephone: (703)352-1933 Fax: (703)591-9171

THIS DRAWING & THE DESIGN SHOWN THEREON ARE THE PROPERTY OF 3HA ARCHITECTS. THE REPRODUCTION, COPYING, OR USE OF THIS DRAWING WITH OUT THEIR SPECIFIC WRITTEN CONSENT IS PROHIBITED & ANY INFRINGEMENT WILL BE SUBJECT TO LEGAL ACTION.

DESIGN DIRECTIONS INTERNATIONAL
266 Crescent Circle SW., Marietta, GA 30064
Office: (770)424-8419 | Project Manager Cell: (404)909-2529

THIS DRAWING IS THE PROPERTY OF DESIGN DIRECTIONS INTERNATIONAL AND IS NOT TO BE REPRODUCED OR COPIED WHOLE OR IN PART. IT IS ONLY TO BE USED FOR THE PROJECT AND SITE SPECIFICALLY INTENDED HEREIN, AND IS NOT TO BE USED ON ANY OTHER PROJECT. IT IS TO BE RETURNED UPON REQUEST. SCALES AS STATED HEREON ARE VALID ON THE ORIGINAL DRAWING. THE DIMENSIONS OF WHICH ARE 30" X 42" INCHES.

CLIENT:
CHANTILLY HOTEL, LLC.
4335 CHANTILLY SHOPPING CENTER,
CHANTILLY, VA 20151

ISSUES/REVISIONS

NO.	DATE:	REMARKS:
	10/26/2020	BID DOCUMENT SET
1	11/3/2020	BID DOCUMENT SET REVISIONS
2	1/4/2021	DESIGN REVIEW REVISIONS

PROJECT NAME:
CROWNE PLAZA® HOTELS & RESORTS
4335 CHANTILLY SHOPPING CENTER
CHANTILLY, VA

DRAWING NAME
ENLARGED MEETING SPACE, FITNESS & BOH - FF&E PLAN

SCALE	PROJECT NO.
AS NOTED	1903
DRAWN BY	DATE
KAK & DVE	10.2.2020

DRAWING NO.
ID-101B



1 1ST LEVEL PUBLIC SPACE FLOOR FINISH PLAN

SCALE: 1/8" = 1'-0"

CONSTRUCTION NOTES:

1. GC TO PROVIDE SCHLUTER TRANSITION BETWEEN CARPET AND TILE, AS WELL AS INDICATED PER THIS PLAN.
2. GC TO PROVIDE TAKE OFFS TO DESIGNER / PURCHASING AGENT PER FINISH PLANS, FINISH SCHEDULES, AND ELEVATIONS.
3. ALL PAINTED WALLS ARE TO BE CONSIDERED KNOCK DOWN TEXTURE. IF KNOCK DOWN TEXTURE IS NOT TO BE PROVIDED, GC TO USE SCRUB TOUGH PAINT OR EQUAL.
4. SEE FINISH SCHEDULE FOR EXACT FINISH SPECIFICATIONS AND DETAILS.
5. SEE ELEVATIONS AND DETAILS FOR MILLWORK SPECIFICATIONS.

FLOOR FINISH LEGEND

XX ##	DENOTES FINISH TYPE | FINISH NUMBER
	DENOTES CARPET OR AREA RUG FLOORING FINISH
	DENOTES TILE FLOORING FINISH TO BE INSTALLED IN THE DIRECTION & ORIENTATION SHOWN.

4IA ARCHITECTS
4501 University Drive, Suite 130, Fairfax, VA. 22030
Telephone: (703)352-1933 Fax: (703)691-9171

THIS DRAWING & THE DESIGN SHOWN THEREON ARE THE PROPERTY OF 3HA ARCHITECTS. THE REPRODUCTION, COPYING, OR USE OF THIS DRAWING WITH OUT THEIR SPECIFIC WRITTEN CONSENT IS PROHIBITED & ANY INFRINGEMENT WILL BE SUBJECT TO LEGAL ACTION.

DESIGN DIRECTIONS INTERNATIONAL
266 Crescent Circle SW., Marietta, GA 30064
Office: (770)424-8419 | Project Manager Cell: (404)909-2529

THIS DRAWING IS THE PROPERTY OF DESIGN DIRECTIONS INTERNATIONAL AND IS NOT TO BE REPRODUCED OR COPIED WHOLE OR IN PART. IT IS ONLY TO BE USED FOR THE PROJECT AND SITE SPECIFICALLY INTENDED HEREIN, AND IS NOT TO BE USED ON ANY OTHER PROJECT. IT IS TO BE RETURNED UPON REQUEST. SCALES AS STATED HEREON ARE VALID ON THE ORIGINAL DRAWING. THE DIMENSIONS OF WHICH ARE 30" X 42" INCHES.

CLIENT:
CHANTILLY HOTEL, LLC.
4335 CHANTILLY SHOPPING CENTER,
CHANTILLY, VA 20151

ISSUES/REVISIONS

NO.	DATE:	REMARKS:
	10/26/2020	BID DOCUMENT SET
1	11/3/2020	BID DOCUMENT SET REVISIONS
2	1/4/2021	DESIGN REVIEW REVISIONS

PROJECT NAME:
CROWNE PLAZA® HOTELS & RESORTS
4335 CHANTILLY SHOPPING CENTER
CHANTILLY, VA

DRAWING NAME
1ST LEVEL PUBLIC SPACE - FLOOR FINISH PLAN

SCALE	PROJECT NO.
AS NOTED	1903
DRAWN BY	DATE
KAK & DVE	10.2.2020

DRAWING NO.
ID-102

CONSTRUCTION NOTES:

1. GC TO PROVIDE SCHLUTER TRANSITION BETWEEN CARPET AND TILE, AS WELL AS INDICATED PER THIS PLAN.
2. GC TO PROVIDE TAKE OFF'S TO DESIGNER / PURCHASING AGENT PER FINISH PLANS, FINISH SCHEDULES, AND ELEVATIONS.
3. ALL PAINTED WALLS ARE TO BE CONSIDERED KNOCK DOWN TEXTURE, IF KNOCK DOWN TEXTURE IS NOT TO BE PROVIDED, GC TO USE SCRUB TOUGH PAINT OR EQUAL.
4. SEE FINISH SCHEDULE FOR EXACT FINISH SPECIFICATIONS AND DETAILS.
5. SEE ELEVATIONS AND DETAILS FOR MILLWORK SPECIFICATIONS.

FLOOR FINISH LEGEND

XX ## — DENOTES FINISH TYPE | FINISH NUMBER

DENOTES CARPET OR AREA RUG FLOORING FINISH

DENOTES TILE FLOORING FINISH TO BE INSTALLED IN THE DIRECTION & ORIENTATION SHOWN.

TR 3 TRANSITION WALL
PT 5 PORCELAIN TILE
PTB 1 PORCELAIN TILE BASE

MEN'S TOILET 41
WOMEN'S TOILET 40
ELEVATOR LOBBY 06
MARKET 09
LUGGAGE 09A
FRONT DESK 02
LOUNGE / LOBBY 03
CARTS 02A
VESTIBULE 01
RESTAURANT 04
RESTAURANT MANAGER 56B
STORAGE 56A
LIQUOR STORAGE 56
BAR 05
BUSINESS AREA XX

NOT IN ID SCOPE REFER TO KITCHEN CONSULTANT F&B DRAWINGS

CHILLER
CHILLER

BALL ROOM 59
BALL RM. STOR. 59A
COATS 61A
PRE-FUNCTION 61
BALL ROOM STORAGE 60
VESTIBULE 62

4JA ARCHITECTS
4501 University Drive, Suite 130, Fairfax, VA. 22030
Telephone: (703)352-1933 Fax: (703)691-9171

THIS DRAWING & THE DESIGN SHOWN THEREON ARE THE PROPERTY OF 3HA ARCHITECTS. THE REPRODUCTION, COPYING, OR USE OF THIS DRAWING WITH OUT THEIR SPECIFIC WRITTEN CONSENT IS PROHIBITED & ANY INFRINGEMENT WILL BE SUBJECT TO LEGAL ACTION.

DESIGN DIRECTIONS INTERNATIONAL
266 Crescent Circle SW., Marietta, GA 30064
Office: (770)424-8419 | Project Manager Cell: (404)909-2529

THIS DRAWING IS THE PROPERTY OF DESIGN DIRECTIONS INTERNATIONAL AND IS NOT TO BE REPRODUCED OR COPIED WHOLE OR IN PART. IT IS ONLY TO BE USED FOR THE PROJECT AND SITE SPECIFICALLY INTENDED HEREIN, AND IS NOT TO BE USED ON ANY OTHER PROJECT. IT IS TO BE RETURNED UPON REQUEST. SCALES AS STATED HEREON ARE VALID ON THE ORIGINAL DRAWING. THE DIMENSIONS OF WHICH ARE 30" X 42" INCHES.

CLIENT:
CHANTILLY HOTEL, LLC.
4335 CHANTILLY SHOPPING CENTER,
CHANTILLY, VA 20151

ISSUES/REVISIONS

NO.	DATE:	REMARKS:
	10/26/2020	BID DOCUMENT SET
1	11/3/2020	BID DOCUMENT SET REVISIONS
2	1/4/2021	DESIGN REVIEW REVISIONS

PROJECT NAME:
CROWNE PLAZA HOTELS & RESORTS
4335 CHANTILLY SHOPPING CENTER
CHANTILLY, VA

DRAWING NAME
ENLARGED LOBBY & BALL ROOM - FLOOR FINISH PLAN

SCALE	PROJECT NO.
AS NOTED	1903
DRAWN BY	DATE
KAK & DVE	10.2.2020

DRAWING NO.
ID-102A

PRICING SET ONLY | NOT ISSUED FOR CONSTRUCTION

CONSTRUCTION NOTES:

1. GC TO PROVIDE SCHLUTER TRANSITION BETWEEN CARPET AND TILE, AS WELL AS INDICATED PER THIS PLAN.
2. GC TO PROVIDE TAKE OFFS TO DESIGNER / PURCHASING AGENT PER FINISH PLANS, FINISH SCHEDULES, AND ELEVATIONS.
3. ALL PAINTED WALLS ARE TO BE CONSIDERED KNOCK DOWN TEXTURE. IF KNOCK DOWN TEXTURE IS NOT TO BE PROVIDED, GC TO USE SCRUB TOUGH PAINT OR EQUAL.
4. SEE FINISH SCHEDULE FOR EXACT FINISH SPECIFICATIONS AND DETAILS.
5. SEE ELEVATIONS AND DETAILS FOR MILLWORK SPECIFICATIONS.

FLOOR FINISH LEGEND

XX | ##	DENOTES FINISH TYPE | FINISH NUMBER
	DENOTES CARPET OR AREA RUG FLOORING FINISH
	DENOTES TILE FLOORING FINISH TO BE INSTALLED IN THE DIRECTION & ORIENTATION SHOWN.



4IA ARCHITECTS
4501 University Drive, Suite 130, Fairfax, VA. 22030
Telephone: (703)352-1933 Fax: (703)591-9171

THIS DRAWING & THE DESIGN SHOWN THEREON ARE THE PROPERTY OF 3HA ARCHITECTS. THE REPRODUCTION, COPYING, OR USE OF THIS DRAWING WITH OUT THEIR SPECIFIC WRITTEN CONSENT IS PROHIBITED & ANY INFRINGEMENT WILL BE SUBJECT TO LEGAL ACTION.

DESIGN DIRECTIONS INTERNATIONAL
266 Crescent Circle SW., Marietta, GA 30064
Office: (770)424-8419 | Project Manager Cell: (404)909-2529

THIS DRAWING IS THE PROPERTY OF DESIGN DIRECTIONS INTERNATIONAL AND IS NOT TO BE REPRODUCED OR COPIED WHOLE OR IN PART. IT IS ONLY TO BE USED FOR THE PROJECT AND SITE SPECIFICALLY INTENDED HEREIN, AND IS NOT TO BE USED ON ANY OTHER PROJECT. IT IS TO BE RETURNED UPON REQUEST. SCALES AS STATED HEREON ARE VALID ON THE ORIGINAL DRAWING. THE DIMENSIONS OF WHICH ARE 30" X 42" INCHES.

CLIENT:
CHANTILLY HOTEL, LLC.
4335 CHANTILLY SHOPPING CENTER,
CHANTILLY, VA 20151

ISSUES/REVISIONS

NO.	DATE:	REMARKS:
	10/26/2020	BID DOCUMENT SET
1	11/3/2020	BID DOCUMENT SET REVISIONS
2	1/4/2021	DESIGN REVIEW REVISIONS

PROJECT NAME:
CROWNE PLAZA® HOTELS & RESORTS
4335 CHANTILLY SHOPPING CENTER
CHANTILLY, VA

DRAWING NAME:
ENLARGED MEETING SPACE, FITNESS & BOH- FLOOR FINISH PLAN

SCALE	PROJECT NO.
AS NOTED	1903
DRAWN BY	DATE
KAK & DVE	10.2.2020

DRAWING NO.
ID-102B

PRICING SET ONLY | NOT ISSUED FOR CONSTRUCTION

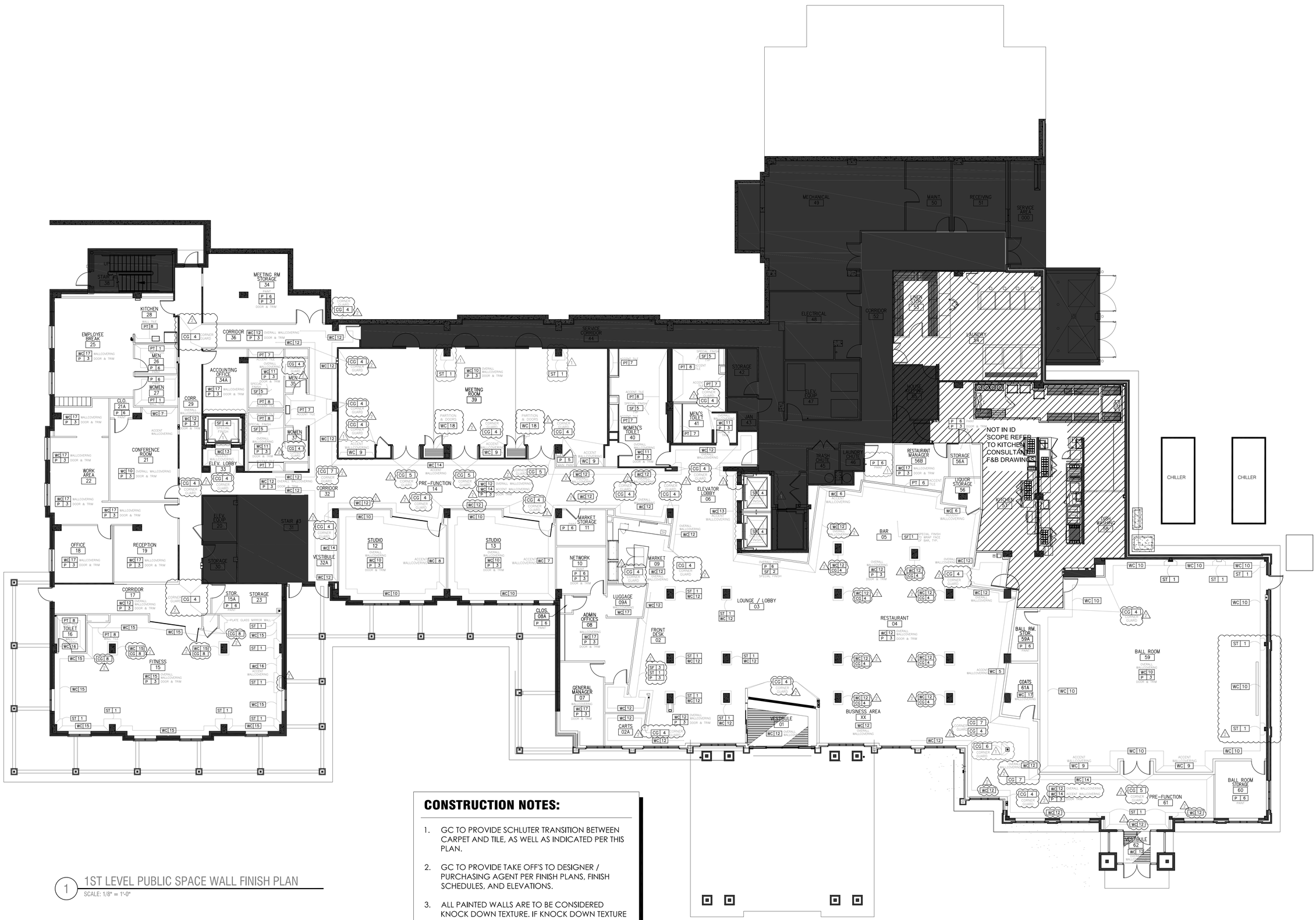

1 1ST LEVEL PUBLIC SPACE WALL FINISH PLAN

SCALE: 1/8" = 1'-0"

CONSTRUCTION NOTES:

1. GC TO PROVIDE SCHLUTER TRANSITION BETWEEN CARPET AND TILE, AS WELL AS INDICATED PER THIS PLAN.
2. GC TO PROVIDE TAKE OFF'S TO DESIGNER / PURCHASING AGENT PER FINISH PLANS, FINISH SCHEDULES, AND ELEVATIONS.
3. ALL PAINTED WALLS ARE TO BE CONSIDERED KNOCK DOWN TEXTURE. IF KNOCK DOWN TEXTURE IS NOT TO BE PROVIDED, GC TO USE SCRUB TOUGH PAINT OR EQUAL.
4. SEE FINISH SCHEDULE FOR EXACT FINISH SPECIFICATIONS AND DETAILS.
5. SEE ELEVATIONS AND DETAILS FOR MILLWORK SPECIFICATIONS.

4IA ARCHITECTS
4501 University Drive, Suite 130, Fairfax, VA. 22030
Telephone: (703)352-1933 Fax: (703)691-9171

THIS DRAWING & THE DESIGN SHOWN THEREON ARE THE PROPERTY OF 3HA ARCHITECTS. THE REPRODUCTION, COPYING, OR USE OF THIS DRAWING WITH OUT THEIR SPECIFIC WRITTEN CONSENT IS PROHIBITED & ANY INFRINGEMENT WILL BE SUBJECT TO LEGAL ACTION.

DESIGN DIRECTIONS INTERNATIONAL
266 Crescent Circle SW., Marietta, GA 30064
Office: (770)424-8419 | Project Manager Cell: (404)909-2529

THIS DRAWING IS THE PROPERTY OF DESIGN DIRECTIONS INTERNATIONAL AND IS NOT TO BE REPRODUCED OR COPIED WHOLE OR IN PART. IT IS ONLY TO BE USED FOR THE PROJECT AND SITE SPECIFICALLY INTENDED HEREIN, AND IS NOT TO BE USED ON ANY OTHER PROJECT. IT IS TO BE RETURNED UPON REQUEST. SCALES AS STATED HEREON ARE VALID ON THE ORIGINAL DRAWING. THE DIMENSIONS OF WHICH ARE 30" X 42" INCHES.

CLIENT:
CHANTILLY HOTEL, LLC.
4335 CHANTILLY SHOPPING CENTER,
CHANTILLY, VA 20151

ISSUES/REVISIONS

NO.	DATE:	REMARKS:
	10/26/2020	BID DOCUMENT SET
1	11/3/2020	BID DOCUMENT SET REVISIONS
2	1/4/2021	DESIGN REVIEW REVISIONS

PROJECT NAME:
CROWNE PLAZA® HOTELS & RESORTS
4335 CHANTILLY SHOPPING CENTER
CHANTILLY, VA

DRAWING NAME
1ST LEVEL PUBLIC SPACE - WALL FINISH PLAN

SCALE	PROJECT NO.
AS NOTED	1903
DRAWN BY	DATE
KAK & DVE	10.2.2020

DRAWING NO.
ID-103

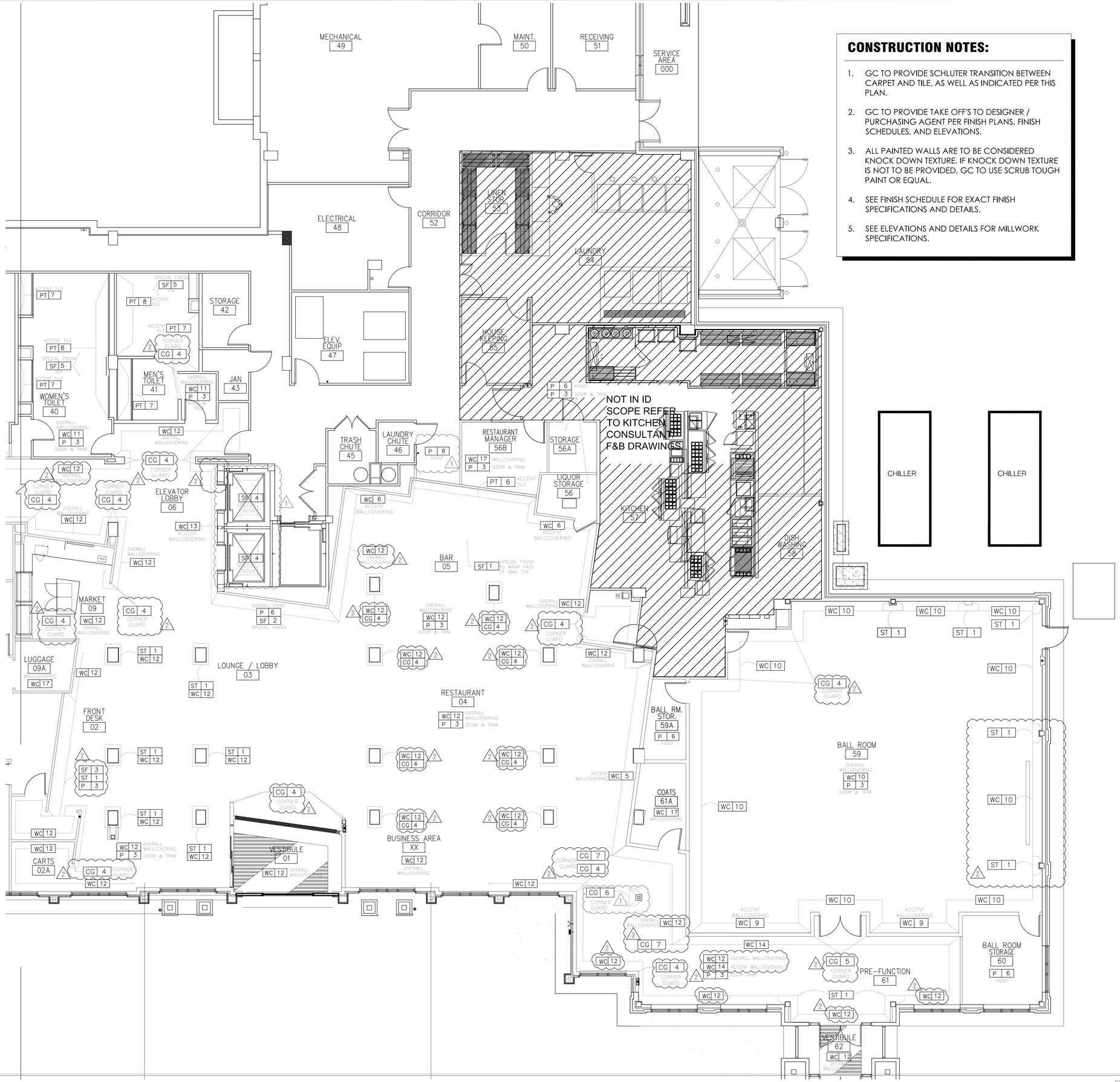

CONSTRUCTION NOTES:

1. GC TO PROVIDE SCHLUTER TRANSITION BETWEEN CARPET AND TILE, AS WELL AS INDICATED PER THIS PLAN.
2. GC TO PROVIDE TAKE OFF'S TO DESIGNER / PURCHASING AGENT PER FINISH PLANS, FINISH SCHEDULES, AND ELEVATIONS.
3. ALL PAINTED WALLS ARE TO BE CONSIDERED KNOCK DOWN TEXTURE. IF KNOCK DOWN TEXTURE IS NOT TO BE PROVIDED, GC TO USE SCRUB TOUGH PAINT OR EQUAL.
4. SEE FINISH SCHEDULE FOR EXACT FINISH SPECIFICATIONS AND DETAILS.
5. SEE ELEVATIONS AND DETAILS FOR MILLWORK SPECIFICATIONS.

JHA ARCHITECTS
4501 University Drive, Suite 120, Fairfax, VA. 22030
Telephone: (703)352-1933 Fax: (703)691-9171

THIS DRAWING & THE DESIGN SHOWN THEREON ARE THE PROPERTY OF JHA ARCHITECTS. THE REPRODUCTION, COPYING, OR USE OF THIS DRAWING WITH OUT THEIR SPECIFIC WRITTEN CONSENT IS PROHIBITED & ANY INFRINGEMENT WILL BE SUBJECT TO LEGAL ACTION.

DESIGN DIRECTIONS INTERNATIONAL
266 Crescent Circle SW., Marietta, GA 30064
Office: (770)424-8419 | Project Manager Cell: (404)909-2529

THIS DRAWING IS THE PROPERTY OF DESIGN DIRECTIONS INTERNATIONAL AND IS NOT TO BE REPRODUCED OR COPIED WHOLE OR IN PART. IT IS ONLY TO BE USED FOR THE PROJECT AND SITE SPECIFICALLY INTENDED HEREIN, AND IS NOT TO BE USED ON ANY OTHER PROJECT. IT IS TO BE RETURNED UPON REQUEST. SCALES AS STATED HEREON ARE VALID ON THE ORIGINAL DRAWING. THE DIMENSIONS OF WHICH ARE 30" X 42" INCHES.

CLIENT:
CHANTILLY HOTEL, LLC.
4335 CHANTILLY SHOPPING CENTER,
CHANTILLY, VA 20151

ISSUES/REVISIONS

NO.	DATE:	REMARKS:
	10/26/2020	BID DOCUMENT SET
1	11/3/2020	BID DOCUMENT SET REVISIONS
2	1/4/2021	DESIGN REVIEW REVISIONS

PROJECT NAME:
CROWNE PLAZA® HOTELS & RESORTS
4335 CHANTILLY SHOPPING CENTER
CHANTILLY, VA

DRAWING NAME
ENLARGED LOBBY & BALL ROOM - WALL FINISH PLAN

SCALE	PROJECT NO.
AS NOTED	1903
DRAWN BY	DATE
KAK & DVE	10.2.2020

DRAWING NO.
ID-103A

PRICING SET ONLY | NOT ISSUED FOR CONSTRUCTION

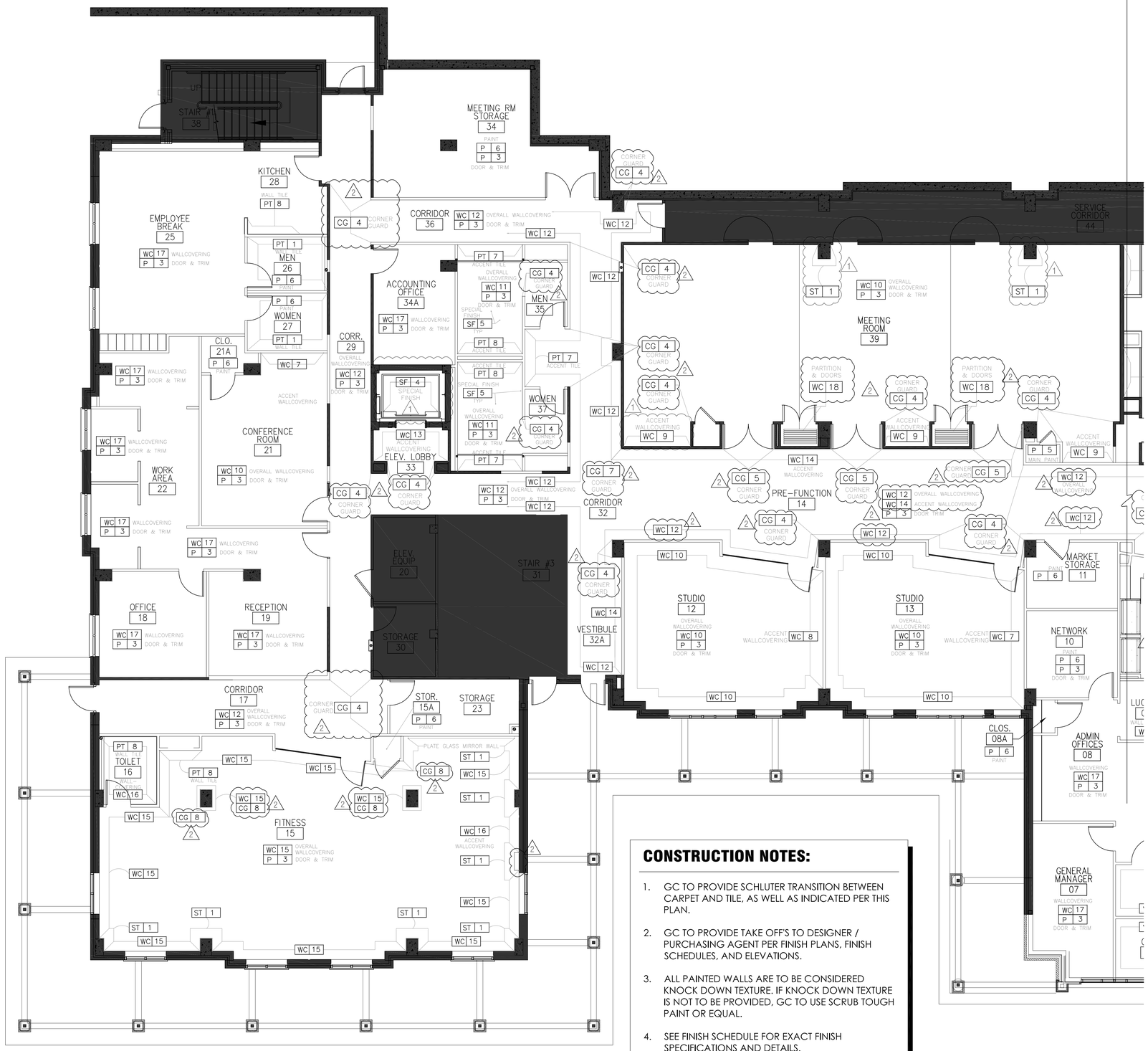

CONSTRUCTION NOTES:

1. GC TO PROVIDE SCHLUTER TRANSITION BETWEEN CARPET AND TILE, AS WELL AS INDICATED PER THIS PLAN.
2. GC TO PROVIDE TAKE OFF'S TO DESIGNER / PURCHASING AGENT PER FINISH PLANS, FINISH SCHEDULES, AND ELEVATIONS.
3. ALL PAINTED WALLS ARE TO BE CONSIDERED KNOCK DOWN TEXTURE. IF KNOCK DOWN TEXTURE IS NOT TO BE PROVIDED, GC TO USE SCRUB TOUGH PAINT OR EQUAL.
4. SEE FINISH SCHEDULE FOR EXACT FINISH SPECIFICATIONS AND DETAILS.
5. SEE ELEVATIONS AND DETAILS FOR MILLWORK SPECIFICATIONS.

JHA ARCHITECTS
4501 University Drive, Suite 120, Fairfax, VA. 22030
Telephone: (703)352-1933 Fax: (703)691-9171

THIS DRAWING & THE DESIGN SHOWN THEREON ARE THE PROPERTY OF JHA ARCHITECTS. THE REPRODUCTION, COPYING, OR USE OF THIS DRAWING WITH OUT THEIR SPECIFIC WRITTEN CONSENT IS PROHIBITED & ANY INFRINGEMENT WILL BE SUBJECT TO LEGAL ACTION.

DESIGN DIRECTIONS INTERNATIONAL
266 Crescent Circle SW., Marietta, GA 30064
Office: (770)424-8419 | Project Manager Cell: (404)909-2529

THIS DRAWING IS THE PROPERTY OF DESIGN DIRECTIONS INTERNATIONAL AND IS NOT TO BE REPRODUCED OR COPIED WHOLE OR IN PART. IT IS ONLY TO BE USED FOR THE PROJECT AND SITE SPECIFICALLY INTENDED HEREIN, AND IS NOT TO BE USED ON ANY OTHER PROJECT. IT IS TO BE RETURNED UPON REQUEST. SCALES AS STATED HEREON ARE VALID ON THE ORIGINAL DRAWING. THE DIMENSIONS OF WHICH ARE 30" X 42" INCHES.

CLIENT:
CHANTILLY HOTEL, LLC.
4335 CHANTILLY SHOPPING CENTER,
CHANTILLY, VA 20151

ISSUES/REVISIONS

NO.	DATE:	REMARKS:
	10/26/2020	BID DOCUMENT SET
1	11/3/2020	BID DOCUMENT SET REVISIONS
2	1/14/2021	DESIGN REVIEW REVISIONS

PROJECT NAME:
CROWNE PLAZA® HOTELS & RESORTS
4335 CHANTILLY SHOPPING CENTER
CHANTILLY, VA

DRAWING NAME:
ENLARGED MEETING SPACE, FITNESS & BOH - WALL FINISH PLAN

SCALE	PROJECT NO.
AS NOTED	1903
DRAWN BY	DATE
KAK & DVE	10.2.2020

DRAWING NO.
ID-103B

CONSTRUCTION NOTES:

1. REFER TO FF&E SPECIFICATIONS FOR OWNER PROVIDED DECORATIVE LIGHT FIXTURE SPECIFICATIONS AND DETAILS. ALL OWNER PROVIDED LIGHT FIXTURES ARE TO BE GC INSTALLED, TYP.
2. ALL DECORATIVE LIGHTING TO BE DIMMABLE, BY WALL SWITCHING, TYP.
3. GC TO REFERENCE ARCHITECTURAL DRAWINGS FOR ALL CEILING DETAILS, ARCHITECTURAL LIGHTING, AND ARCHITECTURAL LIGHTING SPECIFICATIONS.
4. ALL PAINTED WALLS ARE TO BE CONSIDERED KNOCK DOWN TEXTURE. IF KNOCK DOWN TEXTURE IS NOT TO BE PROVIDED, GC TO USE SCRUB TOUGH PAINT OR EQUAL.
5. ANY PORTION OF A WALL SCONCE OR OTHER OBJECT THAT PROTRUDES INTO THE CIRCULATION PATH 27" A.F.F. IS LIMITED TO A 4" MAXIMUM PROJECTION PER THE 2010 ADA GUIDELINES

NOT IN ID SCOPE. REFER TO KITCHEN CONSULTANT/ F&B DRAWINGS

1 1ST LEVEL PUBLIC SPACE REFLECTED CEILING PLAN
SCALE: 1/8" = 1'-0"

4JA ARCHITECTS
4501 University Drive, Suite 130, Fairfax, VA. 22030
Telephone: (703)352-1933 Fax: (703)691-9171

THIS DRAWING & THE DESIGN SHOWN THEREON ARE THE PROPERTY OF 3HA ARCHITECTS. THE REPRODUCTION, COPYING, OR USE OF THIS DRAWING WITH OUT THEIR SPECIFIC WRITTEN CONSENT IS PROHIBITED & ANY INFRINGEMENT WILL BE SUBJECT TO LEGAL ACTION.

DESIGN DIRECTIONS INTERNATIONAL
266 Crescent Circle SW., Marietta, GA 30064
Office: (770)424-8419 | Project Manager Cell: (404)909-2529

THIS DRAWING IS THE PROPERTY OF DESIGN DIRECTIONS INTERNATIONAL AND IS NOT TO BE REPRODUCED OR COPIED WHOLE OR IN PART. IT IS ONLY TO BE USED FOR THE PROJECT AND SITE SPECIFICALLY INTENDED HEREIN, AND IS NOT TO BE USED ON ANY OTHER PROJECT. IT IS TO BE RETURNED UPON REQUEST. SCALES AS STATED HEREON ARE VALID ON THE ORIGINAL DRAWING. THE DIMENSIONS OF WHICH ARE 30" X 42" INCHES.

CLIENT:
CHANTILLY HOTEL, LLC.
4335 CHANTILLY SHOPPING CENTER,
CHANTILLY, VA 20151

ISSUES/REVISIONS

NO.	DATE:	REMARKS:
	10/26/2020	BID DOCUMENT SET
1	11/3/2020	BID DOCUMENT SET REVISIONS
2	1/4/2021	DESIGN REVIEW REVISIONS

PROJECT NAME:
CROWNE PLAZA® HOTELS & RESORTS
4335 CHANTILLY SHOPPING CENTER
CHANTILLY, VA

DRAWING NAME
1ST LEVEL PUBLIC SPACE - REFLECTED CEILING PLAN

SCALE	PROJECT NO.
AS NOTED	1903
DRAWN BY	DATE
KAK & DVE	10.2.2020

DRAWING NO.
ID-104

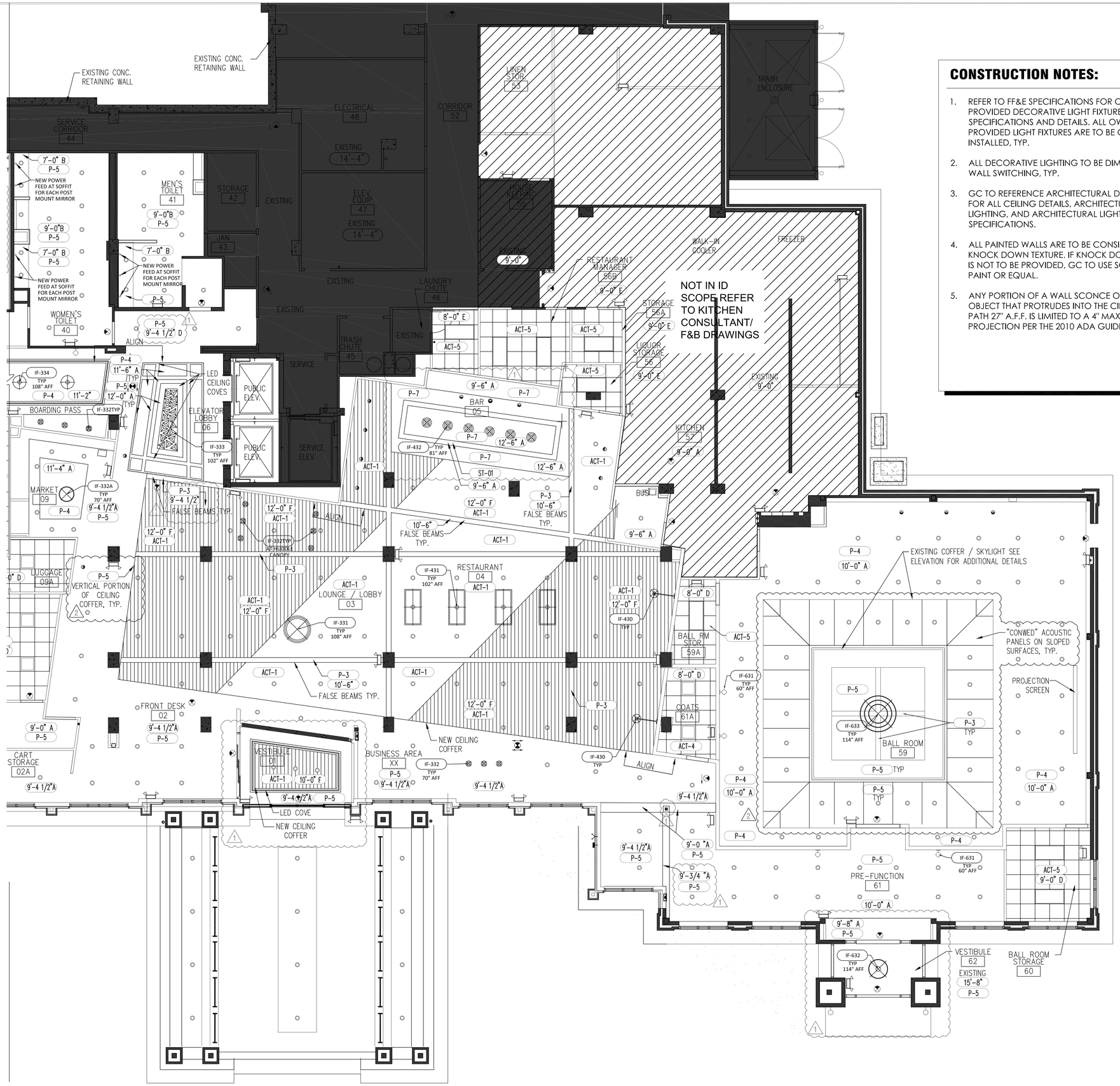

CONSTRUCTION NOTES:

1. REFER TO FF&E SPECIFICATIONS FOR OWNER PROVIDED DECORATIVE LIGHT FIXTURE SPECIFICATIONS AND DETAILS. ALL OWNER PROVIDED LIGHT FIXTURES ARE TO BE GC INSTALLED, TYP.
2. ALL DECORATIVE LIGHTING TO BE DIMMABLE, BY WALL SWITCHING, TYP.
3. GC TO REFERENCE ARCHITECTURAL DRAWINGS FOR ALL CEILING DETAILS, ARCHITECTURAL LIGHTING, AND ARCHITECTURAL LIGHTING SPECIFICATIONS.
4. ALL PAINTED WALLS ARE TO BE CONSIDERED KNOCK DOWN TEXTURE. IF KNOCK DOWN TEXTURE IS NOT TO BE PROVIDED, GC TO USE SCRUB TOUGH PAINT OR EQUAL.
5. ANY PORTION OF A WALL SCONCE OR OTHER OBJECT THAT PROTRUDES INTO THE CIRCULATION PATH 27" A.F.F. IS LIMITED TO A 4" MAXIMUM PROJECTION PER THE 2010 ADA GUIDELINES

4JA ARCHITECTS
4501 University Drive, Suite 120, Fairfax, VA. 22030
Telephone: (703)352-1933 Fax: (703)591-9171

THIS DRAWING & THE DESIGN SHOWN THEREON ARE THE PROPERTY OF 2HA ARCHITECTS. THE REPRODUCTION, COPYING, OR USE OF THIS DRAWING WITH OUT THEIR SPECIFIC WRITTEN CONSENT IS PROHIBITED & ANY INFRINGEMENT WILL BE SUBJECT TO LEGAL ACTION.

DESIGN DIRECTIONS INTERNATIONAL
266 Crescent Circle SW., Marietta, GA 30064
Office: (770)424-8419 | Project Manager Cell: (404)909-2529

THIS DRAWING IS THE PROPERTY OF DESIGN DIRECTIONS INTERNATIONAL AND IS NOT TO BE REPRODUCED OR COPIED WHOLE OR IN PART. IT IS ONLY TO BE USED FOR THE PROJECT AND SITE SPECIFICALLY INTENDED HEREIN, AND IS NOT TO BE USED ON ANY OTHER PROJECT. IT IS TO BE RETURNED UPON REQUEST. SCALES AS STATED HEREON ARE VALID ON THE ORIGINAL DRAWING. THE DIMENSIONS OF WHICH ARE 30" X 42" INCHES.

CLIENT:
CHANTILLY HOTEL, LLC.
4335 CHANTILLY SHOPPING CENTER,
CHANTILLY, VA 20151

ISSUES/REVISIONS

NO.	DATE:	REMARKS:
	10/26/2020	BID DOCUMENT SET
1	11/3/2020	BID DOCUMENT SET REVISIONS
2	1/4/2021	DESIGN REVIEW REVISIONS

PROJECT NAME:
CROWNE PLAZA® HOTELS & RESORTS
4335 CHANTILLY SHOPPING CENTER
CHANTILLY, VA

DRAWING NAME:
ENLARGED LOBBY & BALL ROOM - REFLECTED CEILING PLAN

SCALE	PROJECT NO.
AS NOTED	1903
DRAWN BY	DATE
KAK & DVE	10.2.2020

DRAWING NO.
ID-104A



CONSTRUCTION NOTES:

1. REFER TO FF&E SPECIFICATIONS FOR OWNER PROVIDED DECORATIVE LIGHT FIXTURE SPECIFICATIONS AND DETAILS. ALL OWNER PROVIDED LIGHT FIXTURES ARE TO BE GC INSTALLED, TYP.
2. ALL DECORATIVE LIGHTING TO BE DIMMABLE, BY WALL SWITCHING, TYP.
3. GC TO REFERENCE ARCHITECTURAL DRAWINGS FOR ALL CEILING DETAILS, ARCHITECTURAL LIGHTING, AND ARCHITECTURAL LIGHTING SPECIFICATIONS.
4. ALL PAINTED WALLS ARE TO BE CONSIDERED KNOCK DOWN TEXTURE. IF KNOCK DOWN TEXTURE IS NOT TO BE PROVIDED, GC TO USE SCRUB TOUGH PAINT OR EQUAL.
5. ANY PORTION OF A WALL SCONCE OR OTHER OBJECT THAT PROTRUDES INTO THE CIRCULATION PATH 27" A.F.F. IS LIMITED TO A 4" MAXIMUM PROJECTION PER THE 2010 ADA GUIDELINES

4IA ARCHITECTS
4501 University Drive, Suite 120, Fairfax, VA. 22030
Telephone: (703)352-1933 Fax: (703)691-9171

THIS DRAWING & THE DESIGN SHOWN THEREON ARE THE PROPERTY OF 3HA ARCHITECTS. THE REPRODUCTION, COPYING, OR USE OF THIS DRAWING WITH OUT THEIR SPECIFIC WRITTEN CONSENT IS PROHIBITED & ANY INFRINGEMENT WILL BE SUBJECT TO LEGAL ACTION.

DESIGN DIRECTIONS INTERNATIONAL
266 Crescent Circle SW., Marietta, GA 30064
Office: (770)424-8419 | Project Manager Cell: (404)909-2529

THIS DRAWING IS THE PROPERTY OF DESIGN DIRECTIONS INTERNATIONAL AND IS NOT TO BE REPRODUCED OR COPIED WHOLE OR IN PART. IT IS ONLY TO BE USED FOR THE PROJECT AND SITE SPECIFICALLY INTENDED HEREIN, AND IS NOT TO BE USED ON ANY OTHER PROJECT. IT IS TO BE RETURNED UPON REQUEST. SCALES AS STATED HEREON ARE VALID ON THE ORIGINAL DRAWING. THE DIMENSIONS OF WHICH ARE 30" X 42" INCHES.

CLIENT:
CHANTILLY HOTEL, LLC.
4335 CHANTILLY SHOPPING CENTER,
CHANTILLY, VA 20151

ISSUES/REVISIONS

NO.	DATE:	REMARKS:
	10/26/2020	BID DOCUMENT SET
1	11/3/2020	BID DOCUMENT SET REVISIONS
2	1/4/2021	DESIGN REVIEW REVISIONS

PROJECT NAME:
CROWNE PLAZA® HOTELS & RESORTS
4335 CHANTILLY SHOPPING CENTER
CHANTILLY, VA

DRAWING NAME:
ENLARGED MEETING SPACE, FITNESS & BOH - REFLECTED CEILING PLAN

SCALE	PROJECT NO.
AS NOTED	1903
DRAWN BY	DATE
KAK & DVE	10.2.2020

DRAWING NO.
ID-104B

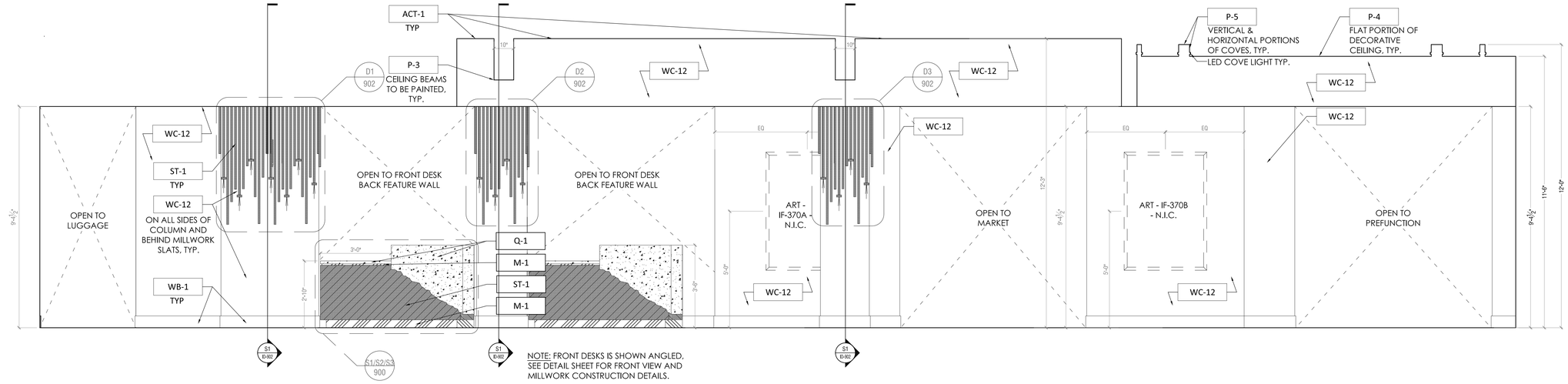

1 FRONT DESK & REGISTRATION WALL

SCALE: 1/2" = 1'-0"

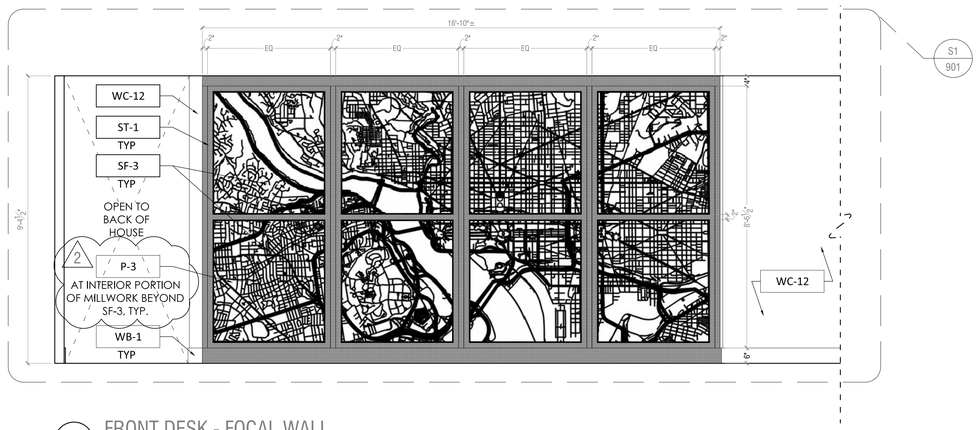

2 FRONT DESK - FOCAL WALL

SCALE: 1/2" = 1'-0"

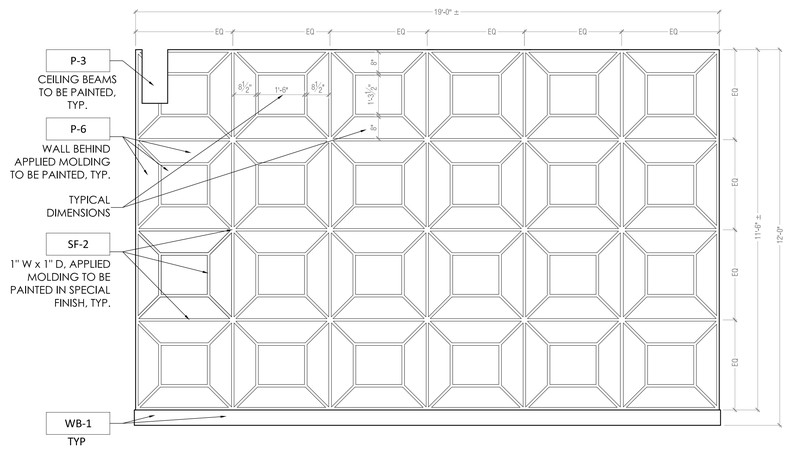

3 HUDDLE FEATURE WALL

SCALE: 1/2" = 1'-0"

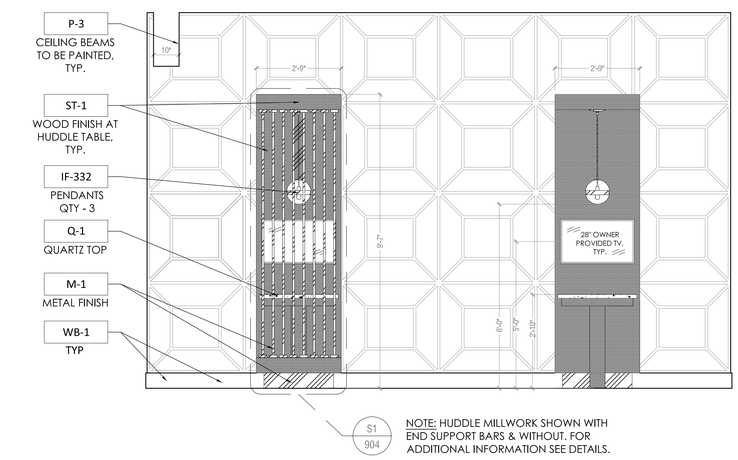

4 HUDDLE MILLWORK & FEATURE WALL

SCALE: 1/2" = 1'-0"

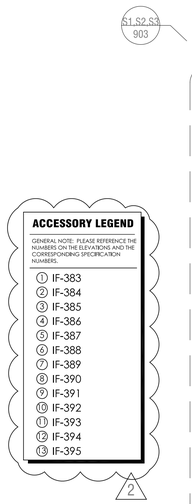

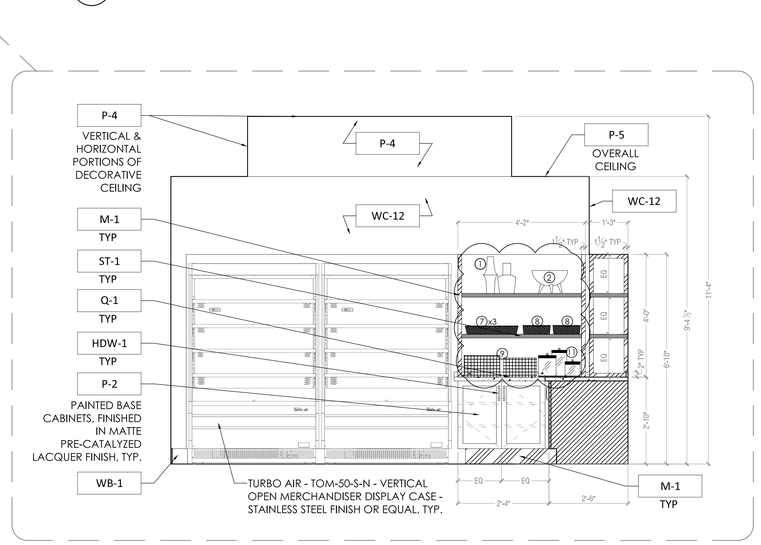

5 MARKET MERCHANDISER & BACK WALL

SCALE: 1/2" = 1'-0"

4ZA ARCHITECTS
4031 University Drive, Suite 100, Fairfax, VA. 22030
Telephone: (703)352-1933 Fax: (703)691-9171

THIS DRAWING & THE DESIGN SHOWN THEREON ARE THE PROPERTY OF ZHA ARCHITECTS. THE REPRODUCTION, COPYING, OR USE OF THIS DRAWING WITH OUT THEIR SPECIFIC WRITTEN CONSENT IS PROHIBITED & ANY INFRINGEMENT WILL BE SUBJECT TO LEGAL ACTION.

DESIGN DIRECTIONS INTERNATIONAL
266 Crescent Circle SW, Marietta, GA 30064
Office: (770)424-8419 | Project Manager Cell: (404)909-2529

THIS DRAWING IS THE PROPERTY OF DESIGN DIRECTIONS INTERNATIONAL AND IS NOT TO BE REPRODUCED OR COPIED WHOLE OR IN PART. IT IS ONLY TO BE USED FOR THE PROJECT AND SITE SPECIFICALLY INTENDED HEREIN, AND IS NOT TO BE USED ON ANY OTHER PROJECT. IT IS TO BE RETURNED UPON REQUEST, SCALES AS STATED HEREON ARE VALID ON THE ORIGINAL DRAWING. THE DIMENSIONS OF WHICH ARE 30" X 42" INCHES.

CLIENT:
CHANTILLY HOTEL, LLC.
4335 CHANTILLY SHOPPING CENTER.
CHANTILLY, VA 20151

ISSUES/REVISIONS

NO.	DATE:	REMARKS:
	10/26/2020	BID DOCUMENT SET
1	11/3/2020	BID DOCUMENT SET REVISIONS
2	1/4/2021	DESIGN REVIEW REVISIONS

PROJECT NAME:
CROWNE PLAZA® HOTELS & RESORTS
4335 CHANTILLY SHOPPING CENTER
CHANTILLY, VA

DRAWING NAME
PUBLIC SPACE ELEVATIONS

SCALE	PROJECT NO.
AS NOTED	1903
DRAWN BY	DATE
KAK & DVE	10.2.2020

DRAWING NO.
ID-800

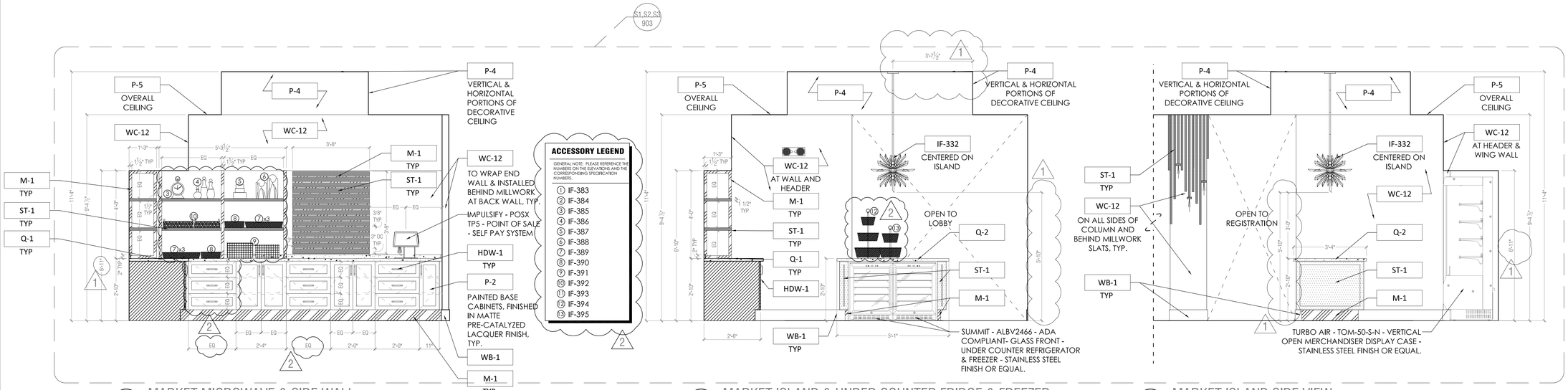

6 MARKET MICROWAVE & SIDE WALL
SCALE: 1/2" = 1'-0"

7 MARKET ISLAND & UNDER COUNTER FRIDGE & FREEZER
SCALE: 1/2" = 1'-0"

8 MARKET ISLAND SIDE VIEW
SCALE: 1/2" = 1'-0"

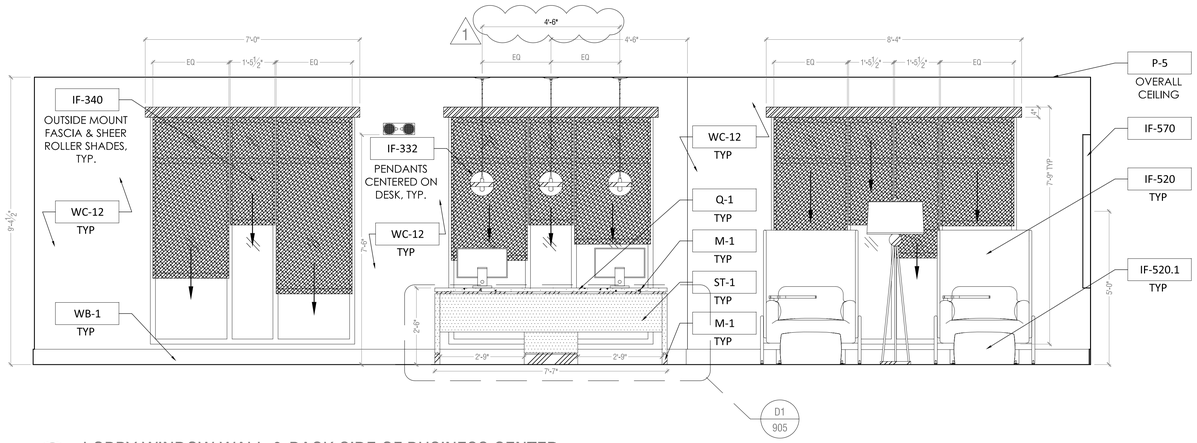

9 LOBBY WINDOW WALL & BACK SIDE OF BUSINESS CENTER
SCALE: 1/2" = 1'-0"

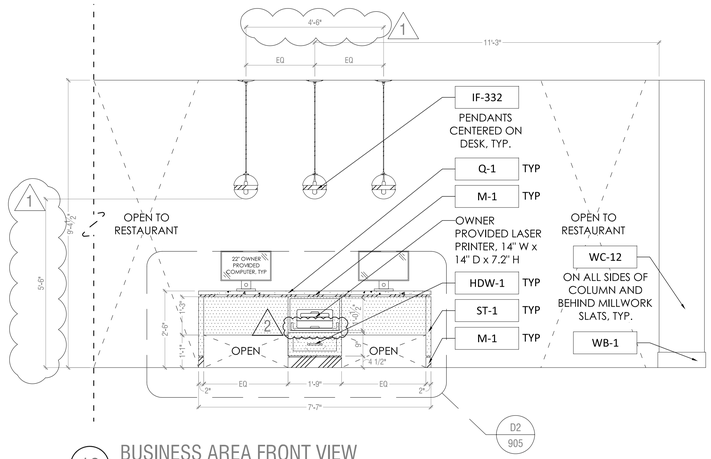

10 BUSINESS AREA FRONT VIEW
SCALE: 1/2" = 1'-0"

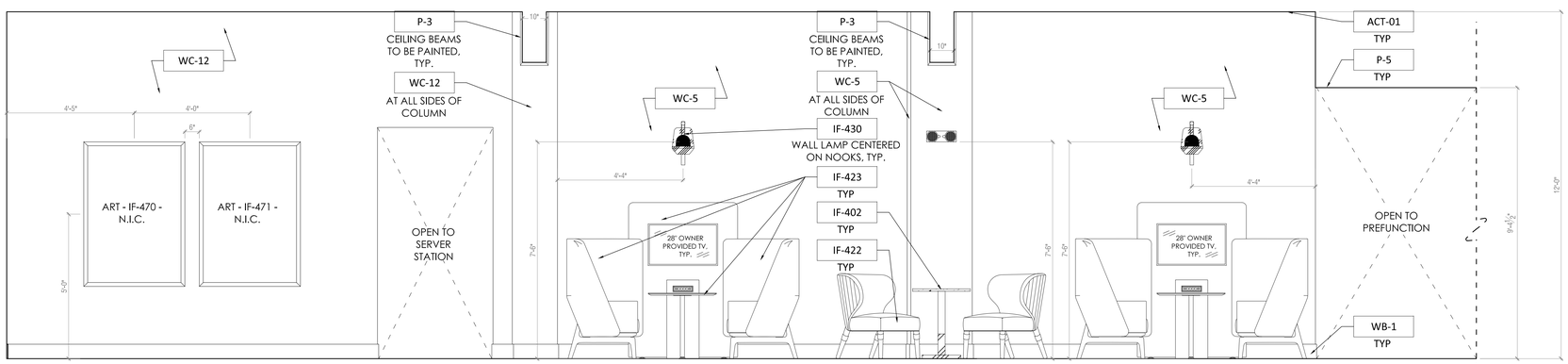

11 RESTAURANT NOOK ACCENT WALL
SCALE: 1/2" = 1'-0"

ARCHITECTS
4501 University Drive, Suite 120, Fairfax, VA. 22030
Telephone: (703)352-1933 Fax: (703)691-9171

THIS DRAWING & THE DESIGN SHOWN THEREON ARE THE PROPERTY OF 2HA ARCHITECTS. THE REPRODUCTION, COPYING, OR USE OF THIS DRAWING WITH OUT THEIR SPECIFIC WRITTEN CONSENT IS PROHIBITED & ANY INFRINGEMENT WILL BE SUBJECT TO LEGAL ACTION.

DESIGN DIRECTIONS INTERNATIONAL
266 Crescent Circle SW., Marietta, GA 30064
Office: (770)424-8419 | Project Manager Cell: (404)909-2529

THIS DRAWING IS THE PROPERTY OF DESIGN DIRECTIONS INTERNATIONAL AND IS NOT TO BE REPRODUCED OR COPIED WHOLE OR IN PART. IT IS ONLY TO BE USED FOR THE PROJECT AND SITE SPECIFICALLY INTENDED HEREIN, AND IS NOT TO BE USED ON ANY OTHER PROJECT. IT IS TO BE RETURNED UPON REQUEST. SCALES AS STATED HEREON ARE VALID ON THE ORIGINAL DRAWING. THE DIMENSIONS OF WHICH ARE 30" X 42" INCHES.

CLIENT:
CHANTILLY HOTEL, LLC.
4335 CHANTILLY SHOPPING CENTER,
CHANTILLY, VA 20151

ISSUES/REVISIONS

NO.	DATE:	REMARKS:
	10/26/2020	BID DOCUMENT SET
1	11/3/2020	BID DOCUMENT SET REVISIONS
2	1/4/2021	DESIGN REVIEW REVISIONS

PROJECT NAME:
CROWNE PLAZA® HOTELS & RESORTS
4335 CHANTILLY SHOPPING CENTER
CHANTILLY, VA

DRAWING NAME
PUBLIC SPACE ELEVATIONS

SCALE	PROJECT NO.
AS NOTED	1903
DRAWN BY	DATE
KAK & DVE	10.2.2020

DRAWING NO.
ID-801

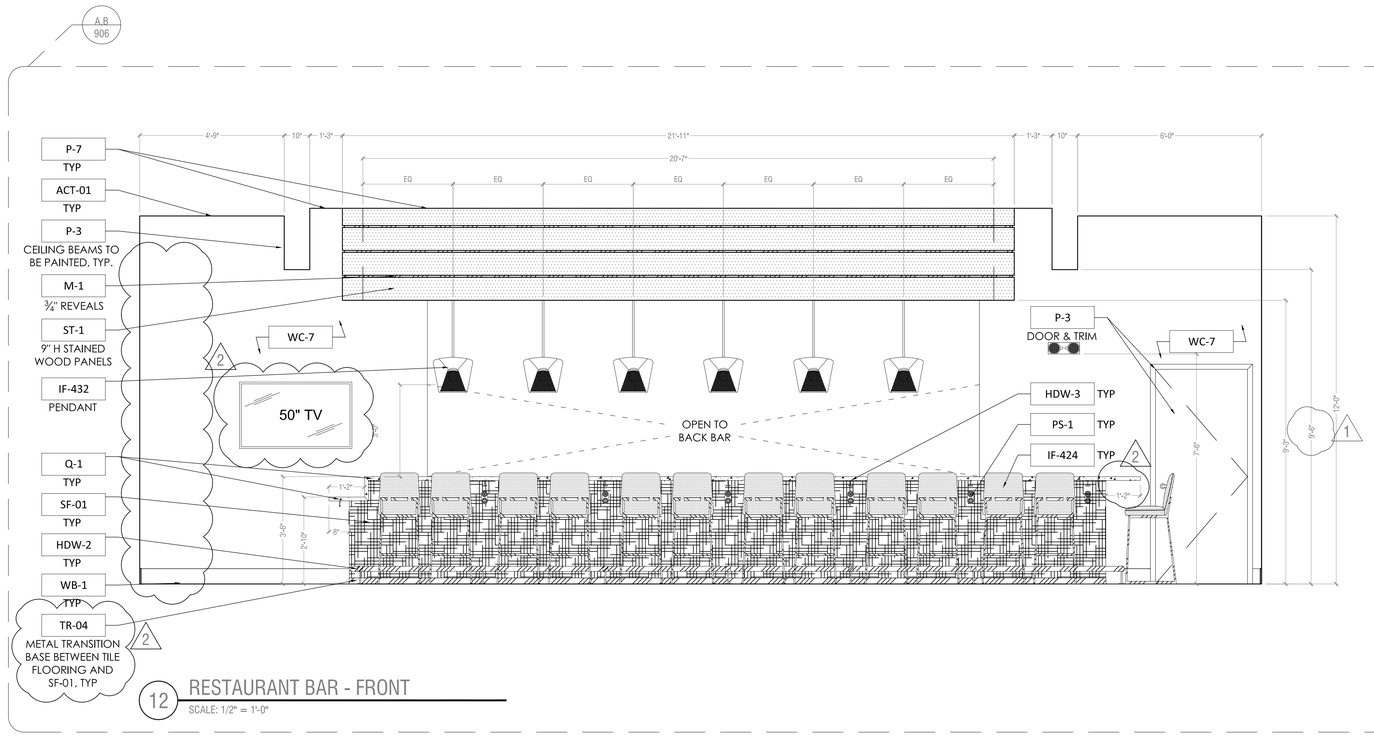

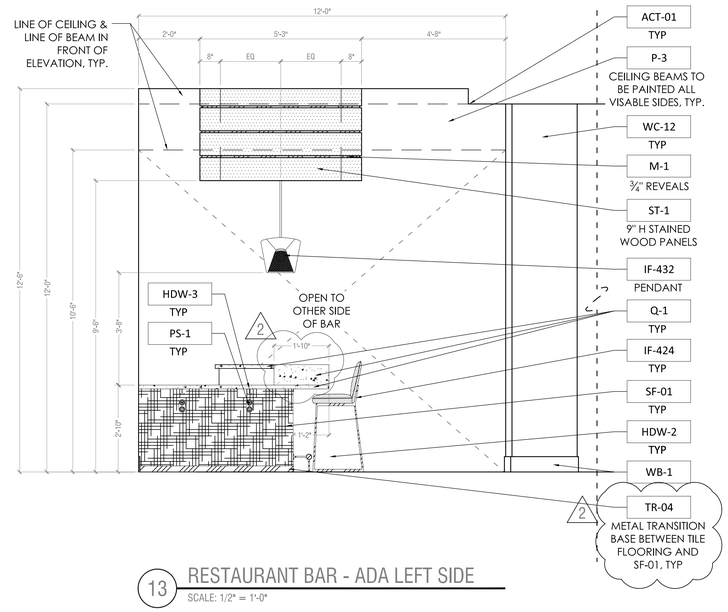

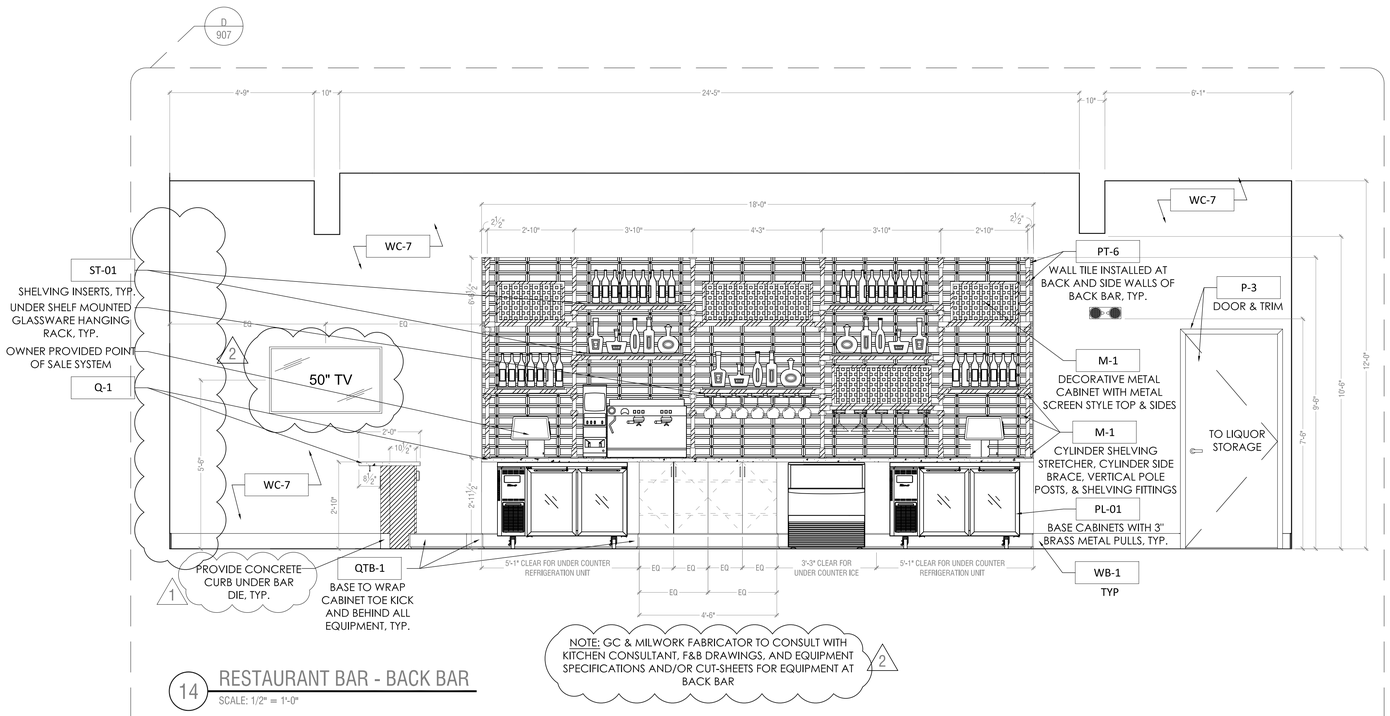

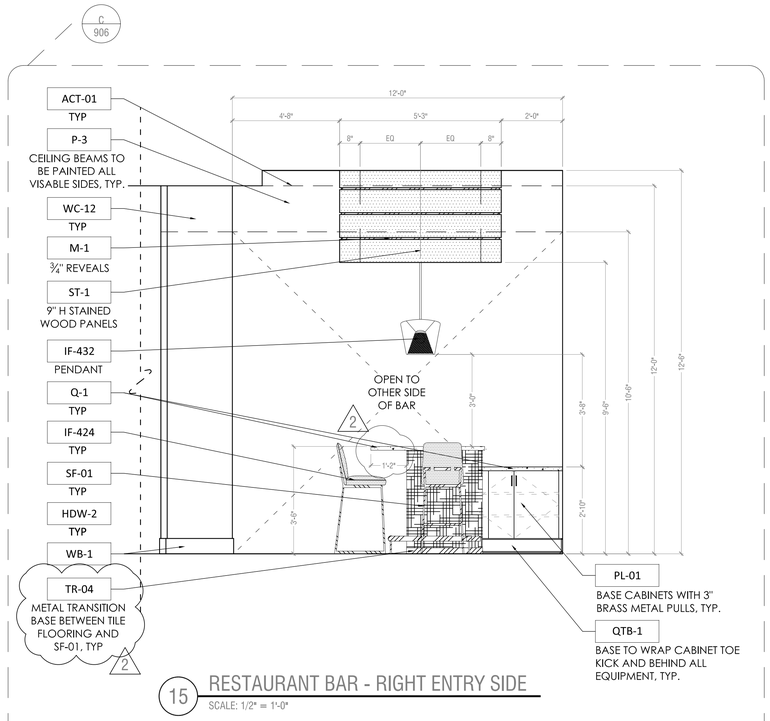

4IA ARCHITECTS
4501 University Drive, Suite 130, Fairfax, VA. 22030
Telephone: (703)352-1933 Fax: (703)691-9171

THIS DRAWING & THE DESIGN SHOWN THEREON ARE THE PROPERTY OF 2HA ARCHITECTS. THE REPRODUCTION, COPYING, OR USE OF THIS DRAWING WITH OUT THEIR SPECIFIC WRITTEN CONSENT IS PROHIBITED & ANY INFRINGEMENT WILL BE SUBJECT TO LEGAL ACTION.

DESIGN DIRECTIONS INTERNATIONAL
266 Crescent Circle SW., Marietta, GA 30064
Office: (770)424-8419 | Project Manager Cell: (404)909-2529

THIS DRAWING IS THE PROPERTY OF DESIGN DIRECTIONS INTERNATIONAL AND IS NOT TO BE REPRODUCED OR COPIED WHOLE OR IN PART. IT IS ONLY TO BE USED FOR THE PROJECT AND SITE SPECIFICALLY INTENDED HEREIN, AND IS NOT TO BE USED ON ANY OTHER PROJECT. IT IS TO BE RETURNED UPON REQUEST. SCALES AS STATED HEREON ARE VALID ON THE ORIGINAL DRAWING. THE DIMENSIONS OF WHICH ARE 30" X 42" INCHES.

CLIENT:
CHANTILLY HOTEL, LLC.
4335 CHANTILLY SHOPPING CENTER,
CHANTILLY, VA 20151

ISSUES/REVISIONS

NO.	DATE:	REMARKS:
	10/26/2020	BID DOCUMENT SET
1	11/3/2020	BID DOCUMENT SET REVISIONS
2	1/14/2021	DESIGN REVIEW REVISIONS

PROJECT NAME:
CROWNE PLAZA® HOTELS & RESORTS
4335 CHANTILLY SHOPPING CENTER
CHANTILLY, VA

DRAWING NAME
PUBLIC SPACE ELEVATIONS

SCALE	PROJECT NO.
AS NOTED	1903
DRAWN BY	DATE
KAK & DVE	10.2.2020

DRAWING NO.
ID-802

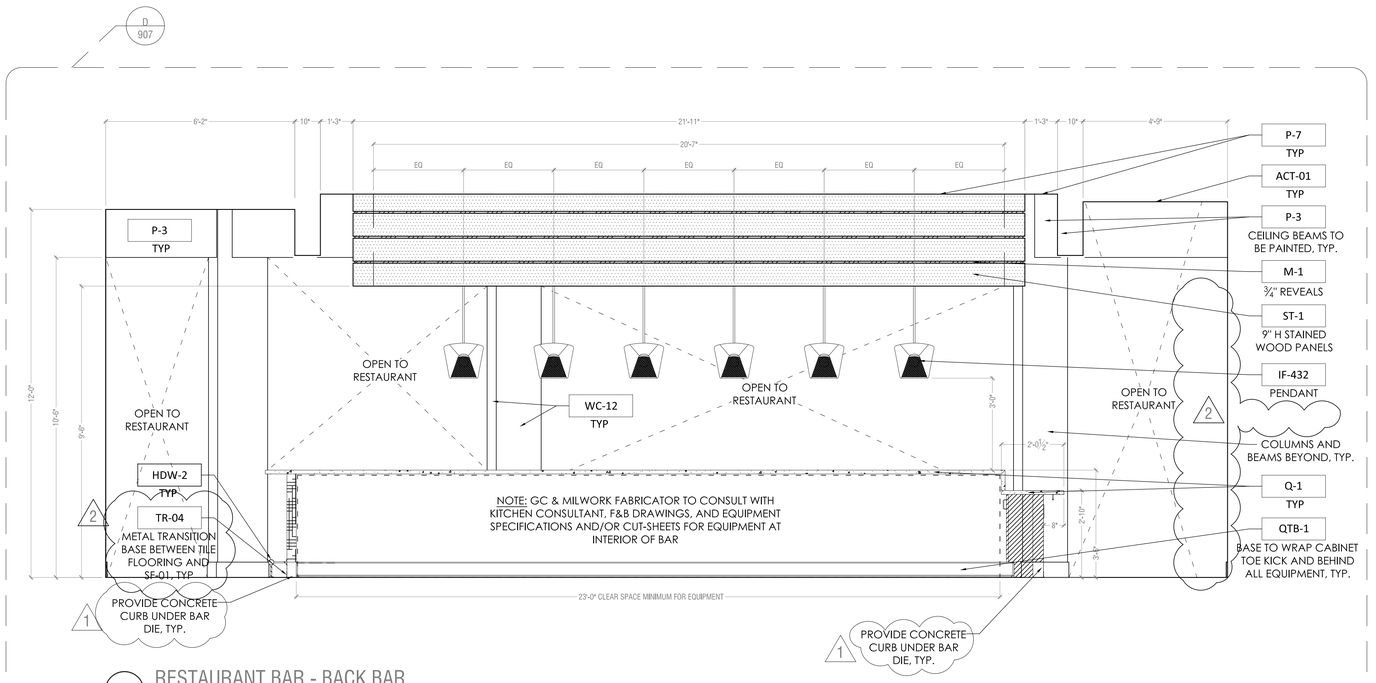

16 RESTAURANT BAR - BACK BAR
SCALE: 1/2" = 1'-0"

NOT USED - REMOVED FROM PROJECT

17 NOT USED
SCALE: 1/2" = 1'-0"

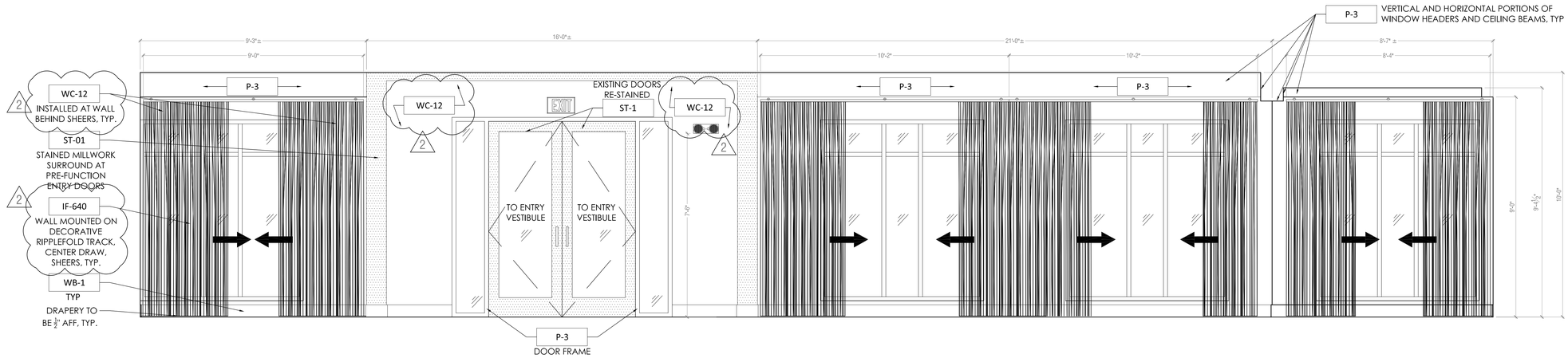

18 VESTIBULE @ PREFUNCTION BALLROOM
SCALE: 1/2" = 1'-0"

4IA ARCHITECTS
4501 University Drive, Suite 130, Fairfax, VA. 22030
Telephone: (703)352-1933 Fax: (703)691-9171

THIS DRAWING & THE DESIGN SHOWN THEREON ARE THE PROPERTY OF 3HA ARCHITECTS. THE REPRODUCTION, COPYING, OR USE OF THIS DRAWING WITH OUT THEIR SPECIFIC WRITTEN CONSENT IS PROHIBITED & ANY INFRINGEMENT WILL BE SUBJECT TO LEGAL ACTION.

DESIGN DIRECTIONS INTERNATIONAL
266 Crescent Circle SW., Marietta, GA 30064
Office: (770)424-8419 | Project Manager Cell: (404)909-2529

THIS DRAWING IS THE PROPERTY OF DESIGN DIRECTIONS INTERNATIONAL AND IS NOT TO BE REPRODUCED OR COPIED WHOLE OR IN PART. IT IS ONLY TO BE USED FOR THE PROJECT AND SITE SPECIFICALLY INTENDED HEREIN, AND IS NOT TO BE USED ON ANY OTHER PROJECT. IT IS TO BE RETURNED UPON REQUEST. SCALES AS STATED HEREON ARE VALID ON THE ORIGINAL DRAWING. THE DIMENSIONS OF WHICH ARE 30" X 42" INCHES.

CLIENT:
CHANTILLY HOTEL, LLC.
4335 CHANTILLY SHOPPING CENTER,
CHANTILLY, VA 20151

ISSUES/REVISIONS

NO.	DATE:	REMARKS:
	10/26/2020	BID DOCUMENT SET
1	11/3/2020	BID DOCUMENT SET REVISIONS
2	1/4/2021	DESIGN REVIEW REVISIONS

PROJECT NAME:
CROWNE PLAZA® HOTELS & RESORTS
4335 CHANTILLY SHOPPING CENTER
CHANTILLY, VA

DRAWING NAME
PUBLIC SPACE ELEVATIONS

SCALE	PROJECT NO.
AS NOTED	1903
DRAWN BY	DATE
KAK & DVE	10.2.2020

DRAWING NO.
ID-803

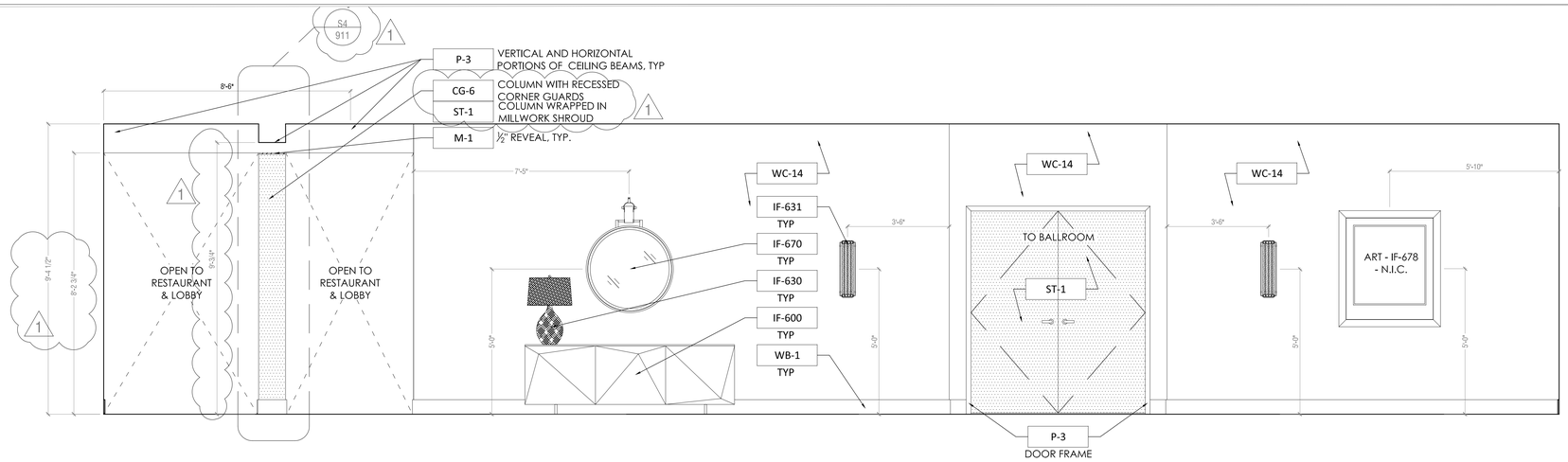

19 PREFUNCTION AT BALLROOM ENTRY WALL

SCALE: 1/2" = 1'-0"

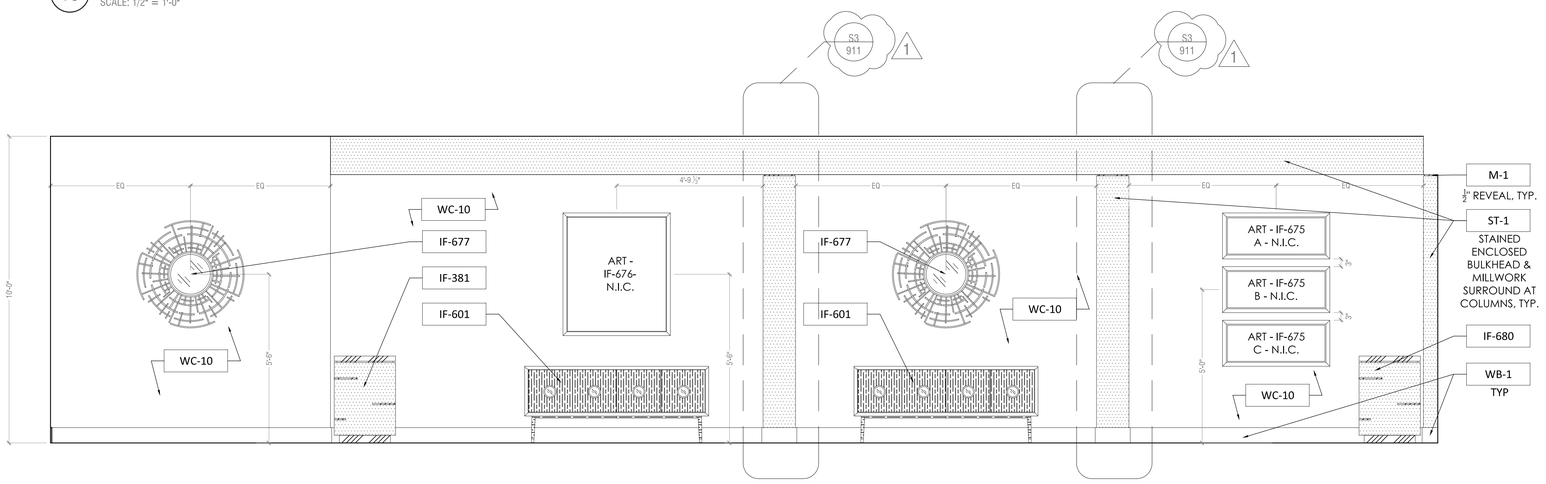

20 BALLROOM REAR WALL WITH ARTWORK, MIRRORS, & CREDENZA

SCALE: 1/2" = 1'-0"

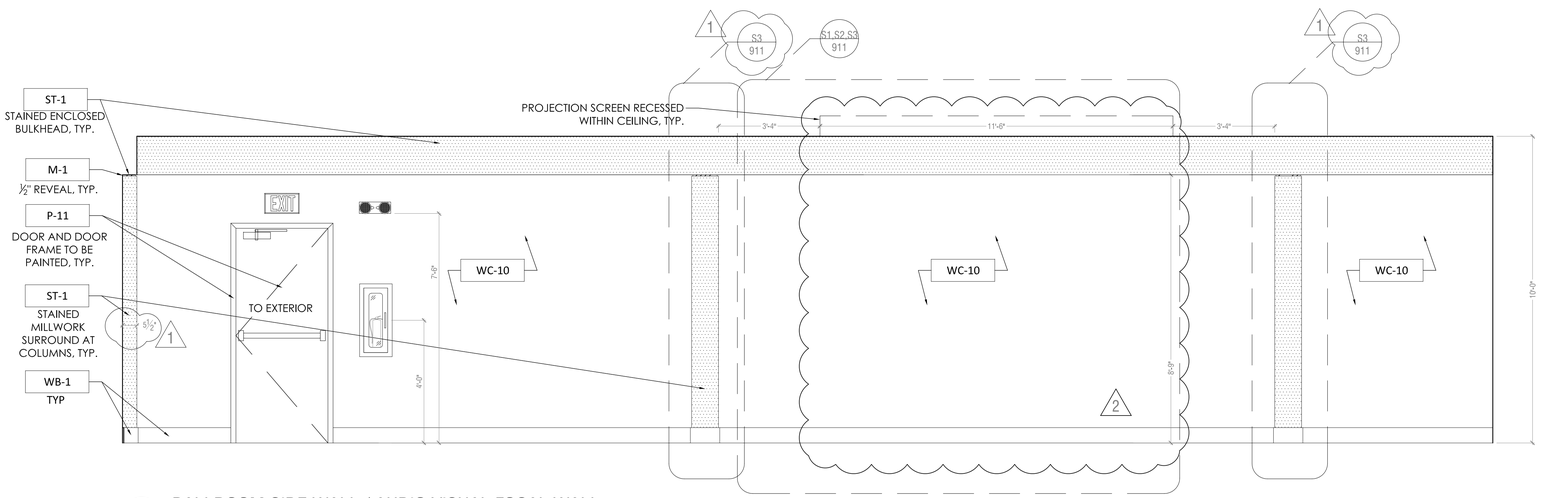

21 BALLROOM SIDE WALL / AUDIO VISUAL FOCAL WALL

SCALE: 1/2" = 1'-0"

4IA ARCHITECTS
4501 University Drive, Suite 130, Fairfax, VA. 22030
Telephone: (703)352-1933 Fax: (703)691-9171

THIS DRAWING & THE DESIGN SHOWN THEREON ARE THE PROPERTY OF 3HA ARCHITECTS. THE REPRODUCTION, COPYING, OR USE OF THIS DRAWING WITH OUT THEIR SPECIFIC WRITTEN CONSENT IS PROHIBITED & ANY INFRINGEMENT WILL BE SUBJECT TO LEGAL ACTION.

DESIGN DIRECTIONS INTERNATIONAL
266 Crescent Circle SW., Marietta, GA 30064
Office: (770)424-8419 | Project Manager Cell: (404)909-2529

THIS DRAWING IS THE PROPERTY OF DESIGN DIRECTIONS INTERNATIONAL AND IS NOT TO BE REPRODUCED OR COPIED WHOLE OR IN PART. IT IS ONLY TO BE USED FOR THE PROJECT AND SITE SPECIFICALLY INTENDED HEREIN, AND IS NOT TO BE USED ON ANY OTHER PROJECT. IT IS TO BE RETURNED UPON REQUEST. SCALES AS STATED HEREON ARE VALID ON THE ORIGINAL DRAWING. THE DIMENSIONS OF WHICH ARE 30" X 42" INCHES.

CLIENT:
CHANTILLY HOTEL, LLC.
4335 CHANTILLY SHOPPING CENTER,
CHANTILLY, VA 20151

ISSUES/REVISIONS

NO.	DATE:	REMARKS:
	10/26/2020	BID DOCUMENT SET
1	11/3/2020	BID DOCUMENT SET REVISIONS
2	1/4/2021	DESIGN REVIEW REVISIONS

PROJECT NAME:
CROWNE PLAZA® HOTELS & RESORTS
4335 CHANTILLY SHOPPING CENTER
CHANTILLY, VA

DRAWING NAME
PUBLIC SPACE ELEVATIONS

SCALE	PROJECT NO.
AS NOTED	1903
DRAWN BY	DATE
KAK & DVE	10.2.2020

DRAWING NO.
ID-804

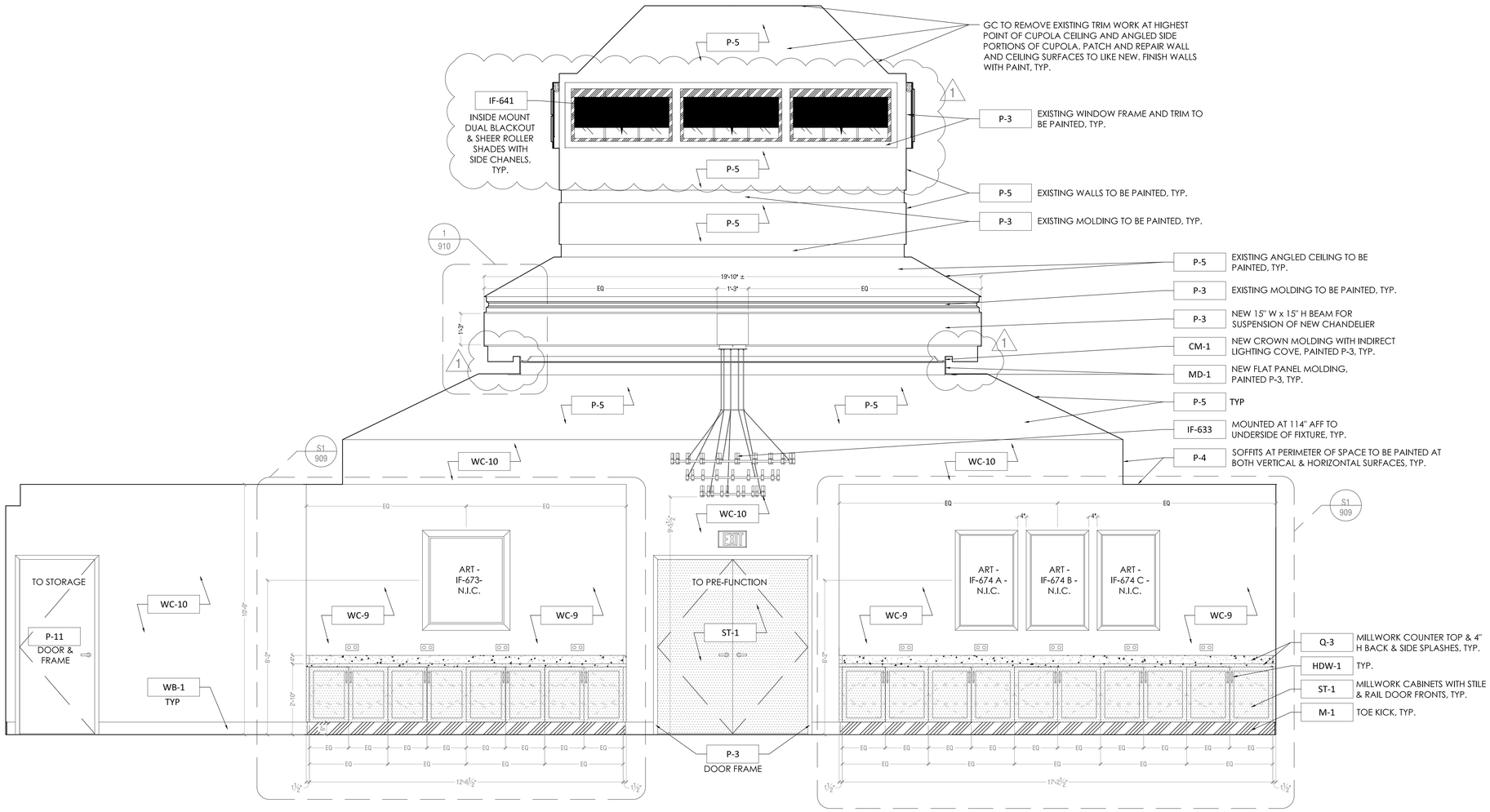

22 BALLROOM ENTRY WALL WITH MILLWORK NICHES & EXISTING CUPOLA CEILING

SCALE: 1/2" = 1'-0"

JHA ARCHITECTS
4031 University Drive, Suite 130, Fairfax, VA. 22030
Telephone: (703)352-1933 Fax: (703)691-9171

THIS DRAWING & THE DESIGN SHOWN THEREON ARE THE PROPERTY OF JHA ARCHITECTS. THE REPRODUCTION, COPYING, OR USE OF THIS DRAWING WITH OUT THEIR SPECIFIC WRITTEN CONSENT IS PROHIBITED & ANY INFRINGEMENT WILL BE SUBJECT TO LEGAL ACTION.

DESIGN DIRECTIONS INTERNATIONAL
266 Crescent Circle SW., Marietta, GA 30064
Office: (770)424-8419 | Project Manager Cell: (404)909-2529

THIS DRAWING IS THE PROPERTY OF DESIGN DIRECTIONS INTERNATIONAL AND IS NOT TO BE REPRODUCED OR COPIED WHOLE OR IN PART. IT IS ONLY TO BE USED FOR THE PROJECT AND SITE SPECIFICALLY INTENDED HEREIN, AND IS NOT TO BE USED ON ANY OTHER PROJECT. IT IS TO BE RETURNED UPON REQUEST. SCALES AS STATED HEREON ARE VALID ON THE ORIGINAL DRAWING. THE DIMENSIONS OF WHICH ARE 30" X 42" INCHES.

CLIENT:
CHANTILLY HOTEL, LLC.
4335 CHANTILLY SHOPPING CENTER,
CHANTILLY, VA 20151

ISSUES/REVISIONS

NO.	DATE:	REMARKS:
	10/26/2020	BID DOCUMENT SET
1	11/3/2020	BID DOCUMENT SET REVISIONS
2	1/4/2021	DESIGN REVIEW REVISIONS

PROJECT NAME:
CROWNE PLAZA® HOTELS & RESORTS
4335 CHANTILLY SHOPPING CENTER
CHANTILLY, VA

DRAWING NAME
PUBLIC SPACE ELEVATIONS

SCALE	PROJECT NO.
AS NOTED	1903
DRAWN BY	DATE
KAK & DVE	10.2.2020

DRAWING NO.
ID-805

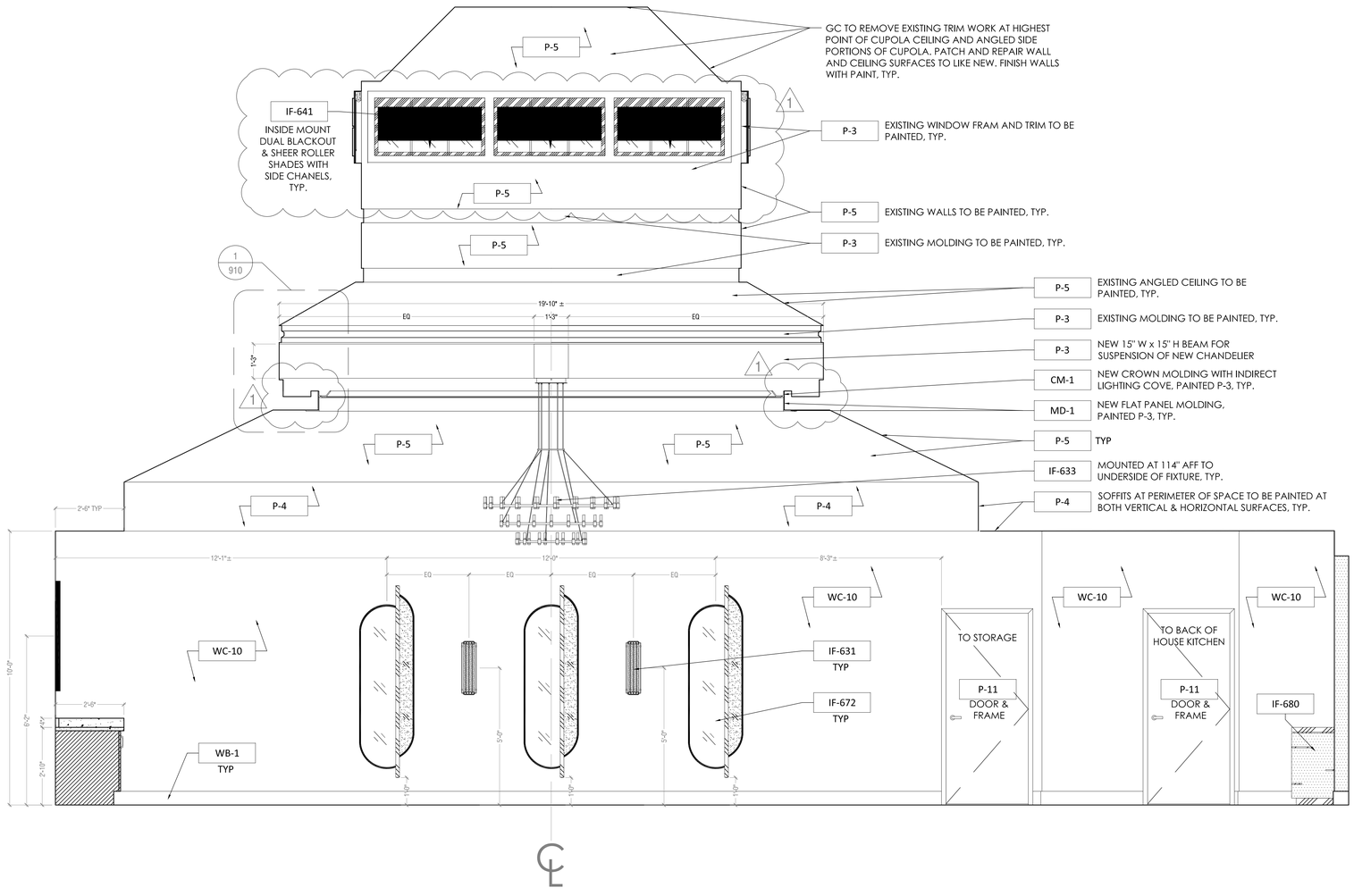

23 BALLROOM SIDE FOCAL WALL WITH SCONCES & EXISTING CUPOLA CEILING

SCALE: 1/2" = 1'-0"

4IA ARCHITECTS
4501 University Drive, Suite 130, Fairfax, VA. 22030
Telephone: (703)352-1933 Fax: (703)691-9171

THIS DRAWING & THE DESIGN SHOWN THEREON ARE THE PROPERTY OF 3HA ARCHITECTS. THE REPRODUCTION, COPYING, OR USE OF THIS DRAWING WITH OUT THEIR SPECIFIC WRITTEN CONSENT IS PROHIBITED & ANY INFRINGEMENT WILL BE SUBJECT TO LEGAL ACTION.

DESIGN DIRECTIONS INTERNATIONAL
266 Crescent Circle SW., Marietta, GA 30064
Office: (770)424-8419 | Project Manager Cell: (404)909-2529

THIS DRAWING IS THE PROPERTY OF DESIGN DIRECTIONS INTERNATIONAL AND IS NOT TO BE REPRODUCED OR COPIED WHOLE OR IN PART. IT IS ONLY TO BE USED FOR THE PROJECT AND SITE SPECIFICALLY INTENDED HERBIN, AND IS NOT TO BE USED ON ANY OTHER PROJECT. IT IS TO BE RETURNED UPON REQUEST. SCALES AS STATED HEREON ARE VALID ON THE ORIGINAL DRAWING. THE DIMENSIONS OF WHICH ARE 30" X 42" INCHES.

CLIENT:
CHANTILLY HOTEL, LLC.
4335 CHANTILLY SHOPPING CENTER,
CHANTILLY, VA 20151

ISSUES/REVISIONS

NO.	DATE:	REMARKS:
	10/26/2020	BID DOCUMENT SET
1	11/3/2020	BID DOCUMENT SET REVISIONS
2	1/14/2021	DESIGN REVIEW REVISIONS

PROJECT NAME:
CROWNE PLAZA® HOTELS & RESORTS
4335 CHANTILLY SHOPPING CENTER
CHANTILLY, VA

DRAWING NAME
PUBLIC SPACE ELEVATIONS

SCALE	PROJECT NO.
AS NOTED	1903
DRAWN BY	DATE
KAK & DVE	10.2.2020

DRAWING NO.
ID-806

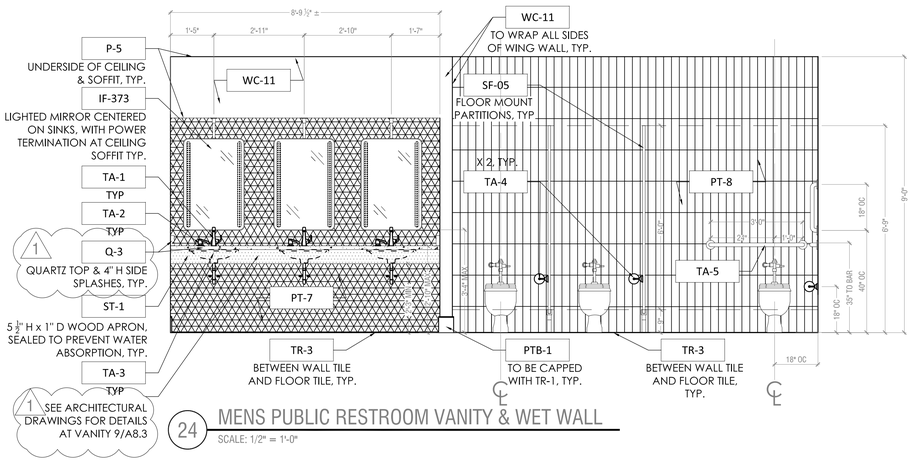

24 MENS PUBLIC RESTROOM VANITY & WET WALL

SCALE: 1/2" = 1'-0"

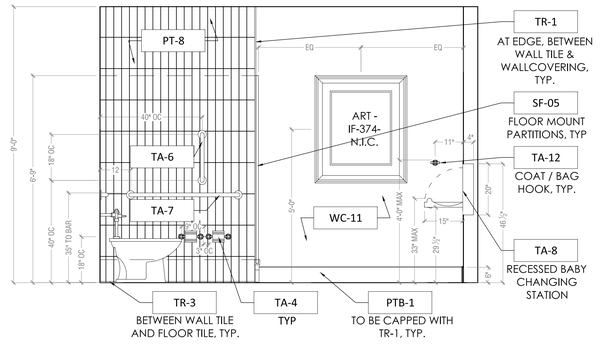

25 MENS PUBLIC RESTROOM ADA STALL & SIDE VIEW

SCALE: 1/2" = 1'-0"

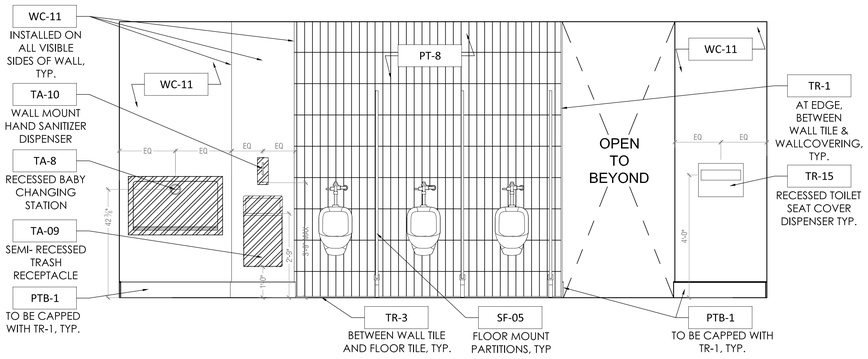

26 MENS PUBLIC RESTROOM WET WALL

SCALE: 1/2" = 1'-0"

GENERAL NOTES:

1. ALL LAV EXPOSED PLUMBING AT UNDERSIDE OF VANITIES TO CONSIST OF NEW, GOLD OR SILVER, UPSCALE PIPING. NO PVC IS ALLOWED.
2. GC TO ENSURE THAT ALL ADA COMPLIANCE IS MET AND VERIFIED BY THE ARCHITECT OF RECORD.

2

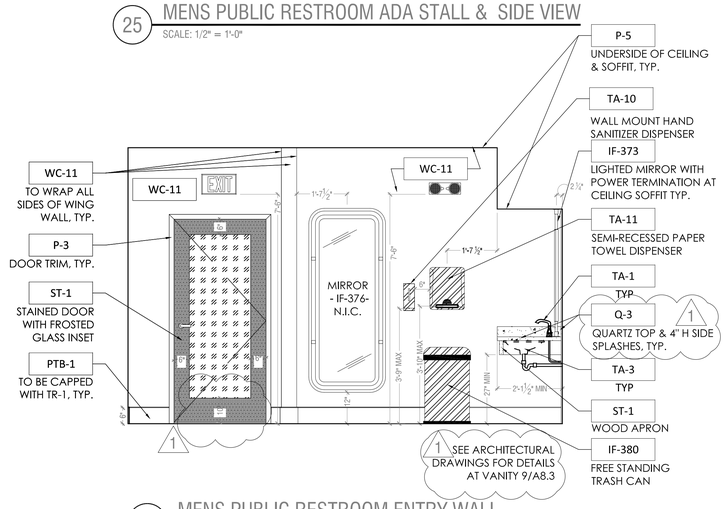

27 MENS PUBLIC RESTROOM ENTRY WALL

SCALE: 1/2" = 1'-0"

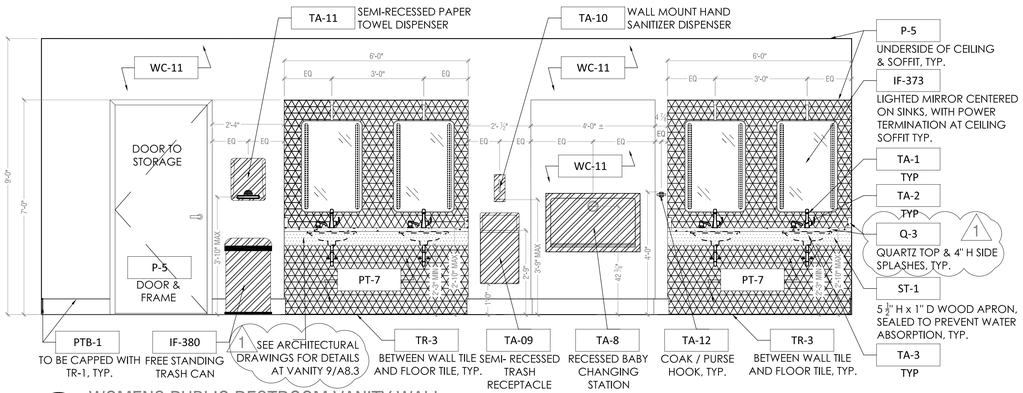

28 WOMENS PUBLIC RESTROOM VANITY WALL

SCALE: 1/2" = 1'-0"

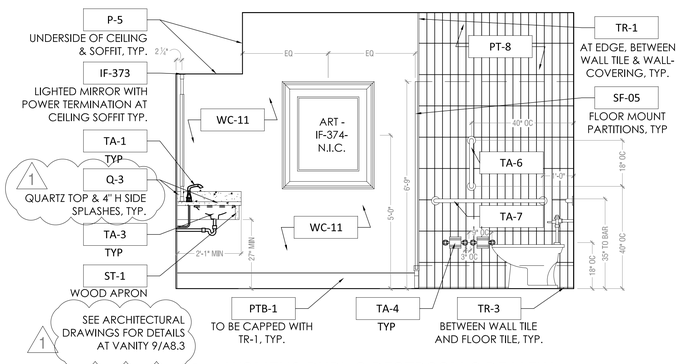

29 WOMENS PUBLIC RESTROOM SIDE VIEW

SCALE: 1/2" = 1'-0"

4IA ARCHITECTS
4031 University Drive, Suite 120, Fairfax, VA. 22030
Telephone: (703)352-1933 Fax: (703)691-9171

THIS DRAWING & THE DESIGN SHOWN THEREON ARE THE PROPERTY OF 3HA ARCHITECTS. THE REPRODUCTION, COPYING, OR USE OF THIS DRAWING WITH OUT THEIR SPECIFIC WRITTEN CONSENT IS PROHIBITED & ANY INFRINGEMENT WILL BE SUBJECT TO LEGAL ACTION.

DESIGN DIRECTIONS INTERNATIONAL
266 Crescent Circle SW., Marietta, GA 30064
Office: (770)424-8419 | Project Manager Cell: (404)909-2529

THIS DRAWING IS THE PROPERTY OF DESIGN DIRECTIONS INTERNATIONAL AND IS NOT TO BE REPRODUCED OR COPIED WHOLE OR IN PART. IT IS ONLY TO BE USED FOR THE PROJECT AND SITE SPECIFICALLY INTENDED HEREIN, AND IS NOT TO BE USED ON ANY OTHER PROJECT. IT IS TO BE RETURNED UPON REQUEST. SCALES AS STATED HEREON ARE VALID ON THE ORIGINAL DRAWING. THE DIMENSIONS OF WHICH ARE 30" X 42" INCHES.

CLIENT:
CHANTILLY HOTEL, LLC.
4335 CHANTILLY SHOPPING CENTER.
CHANTILLY, VA 20151

ISSUES/REVISIONS

NO.	DATE:	REMARKS:
	10/26/2020	BID DOCUMENT SET
1	1/3/2020	BID DOCUMENT SET REVISIONS
2	1/4/2021	DESIGN REVIEW REVISIONS

PROJECT NAME:
CROWNE PLAZA® HOTELS & RESORTS
4335 CHANTILLY SHOPPING CENTER
CHANTILLY, VA

DRAWING NAME
PUBLIC SPACE ELEVATIONS

SCALE	PROJECT NO.
AS NOTED	1903
DRAWN BY	DATE
KAK & DVE	10.2.2020

DRAWING NO.
ID-807

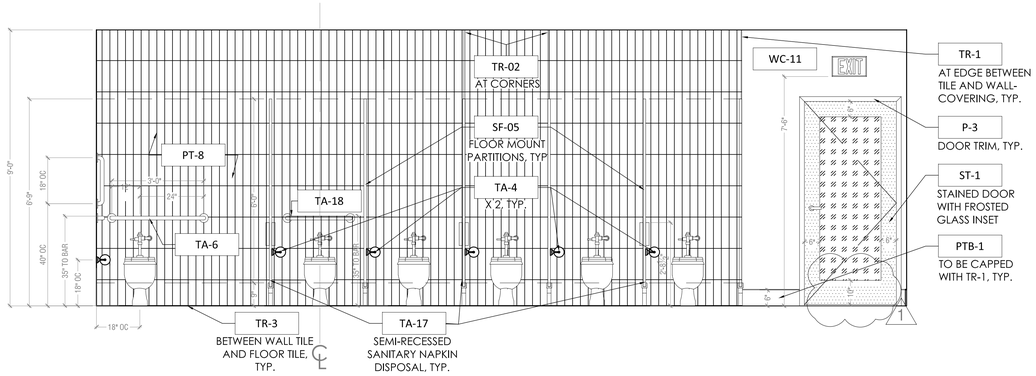

30 WOMENS PUBLIC RESTROOM ENTRY, PARTITION, AND WET WALL

SCALE: 1/2" = 1'-0"

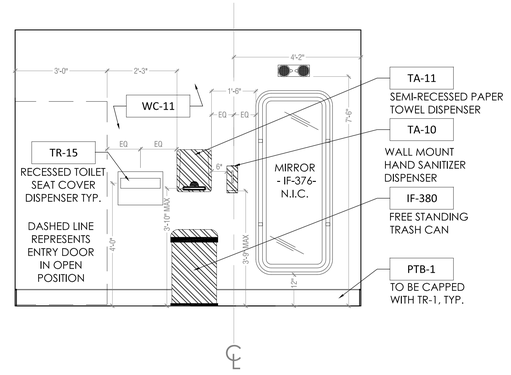

31 WOMENS PUBLIC RESTROOM ENTRY SIDE WALL

SCALE: 1/2" = 1'-0"

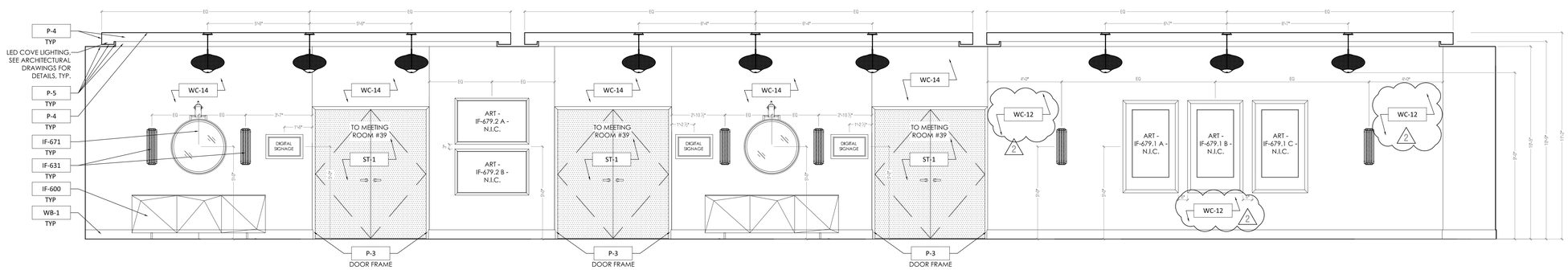

32 PRE-FUNCTION MEETING ROOMS ENTRY DOORS

SCALE: 3/8" = 1'-0"

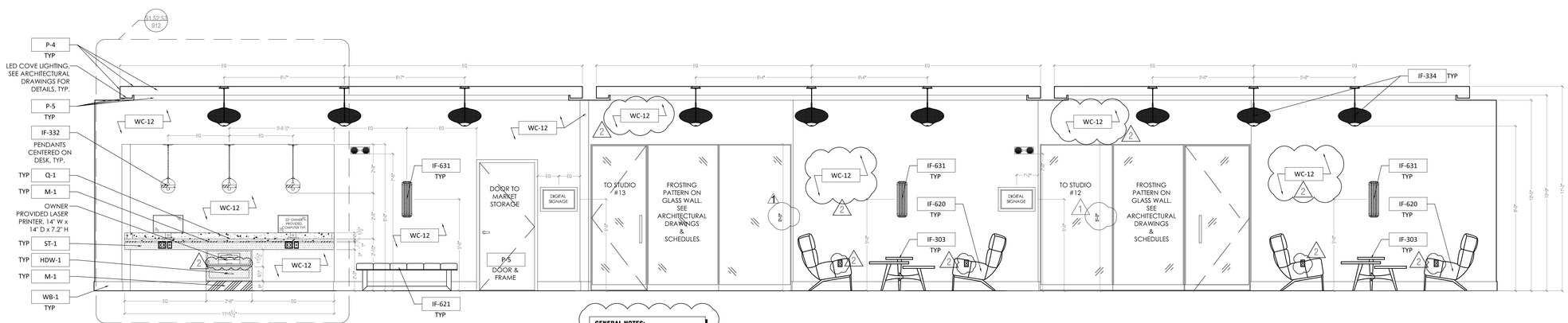

33 PRE-FUNCTION BOARDING PASS STATION & STUDIO ENTRIES

SCALE: 3/8" = 1'-0"

GENERAL NOTES:

1. OUTLETS & RECEPTACLES SHOWN IN ELEVATION OCCUR AT WALL BEYOND FURNITURE AND MILLWORK, UNLESS NOTED OTHERWISE, TYP.

4JA ARCHITECTS
4531 University Drive, Suite 120, Fairfax, VA. 22030
Telephone: (703)352-1933 Fax: (703)691-9171

THIS DRAWING & THE DESIGN SHOWN THEREON ARE THE PROPERTY OF 3HA ARCHITECTS. THE REPRODUCTION, COPYING, OR USE OF THIS DRAWING WITH OUT THEIR SPECIFIC WRITTEN CONSENT IS PROHIBITED & ANY INFRINGEMENT WILL BE SUBJECT TO LEGAL ACTION.

DESIGN DIRECTIONS INTERNATIONAL
266 Crescent Circle SW., Marietta, GA 30064
Office: (770)424-8419 | Project Manager Cell: (404)909-2529

THIS DRAWING IS THE PROPERTY OF DESIGN DIRECTIONS INTERNATIONAL AND IS NOT TO BE REPRODUCED OR COPIED WHOLE OR IN PART. IT IS ONLY TO BE USED FOR THE PROJECT AND SITE SPECIFICALLY INTENDED HEREIN, AND IS NOT TO BE USED ON ANY OTHER PROJECT. IT IS TO BE RETURNED UPON REQUEST. SCALES AS STATED HEREON ARE VALID ON THE ORIGINAL DRAWING. THE DIMENSIONS OF WHICH ARE 30" X 42" INCHES.

CLIENT:
CHANTILLY HOTEL, LLC.
4335 CHANTILLY SHOPPING CENTER,
CHANTILLY, VA 20151

ISSUES/REVISIONS

NO.	DATE:	REMARKS:
	10/26/2020	BID DOCUMENT SET
1	11/3/2020	BID DOCUMENT SET REVISIONS
2	1/4/2021	DESIGN REVIEW REVISIONS

PROJECT NAME:
CROWNE PLAZA® HOTELS & RESORTS
4335 CHANTILLY SHOPPING CENTER
CHANTILLY, VA

DRAWING NAME
PUBLIC SPACE ELEVATIONS

SCALE	PROJECT NO.
AS NOTED	1903
DRAWN BY	DATE
KAK & DVE	10.2.2020

DRAWING NO.
ID-808

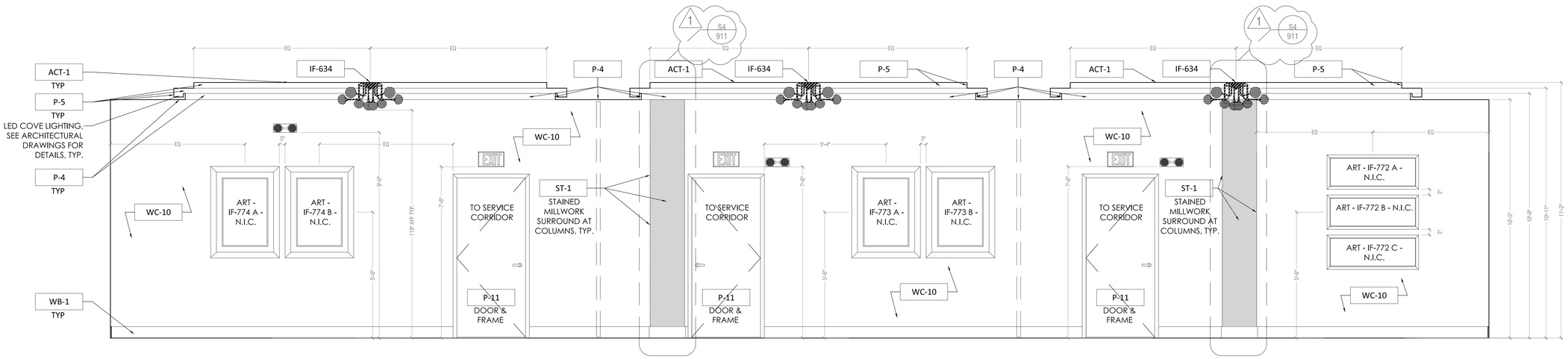

34 MEETING ROOM BACK WALL

SCALE: 1/2" = 1'-0"

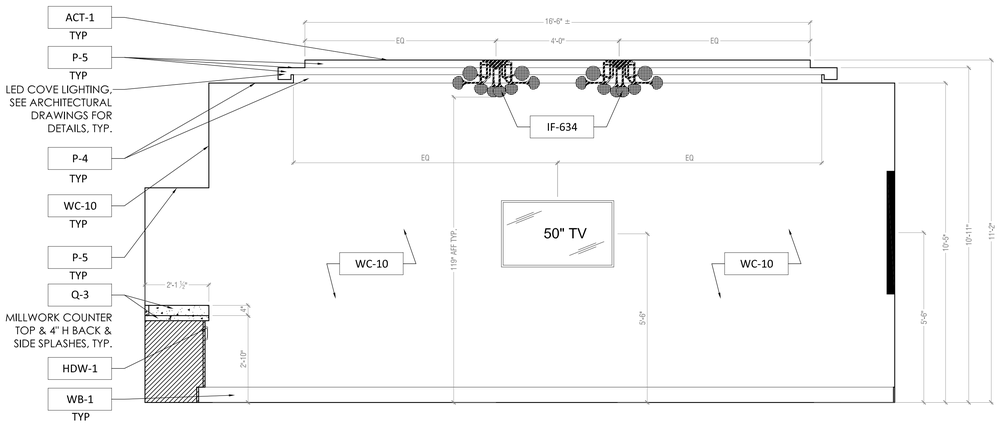

35 MEETING TV SIDE WALL LEFT

SCALE: 1/2" = 1'-0"

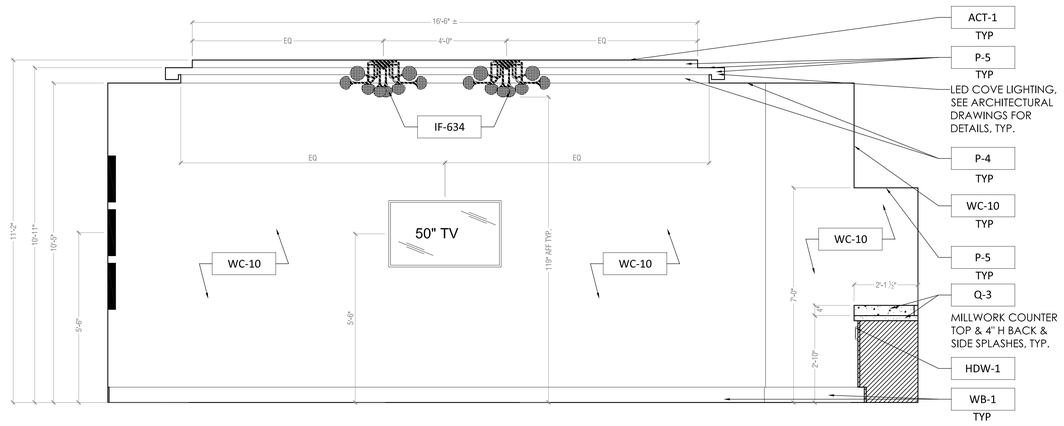

36 MEETING TV SIDE WALL RIGHT

SCALE: 1/2" = 1'-0"

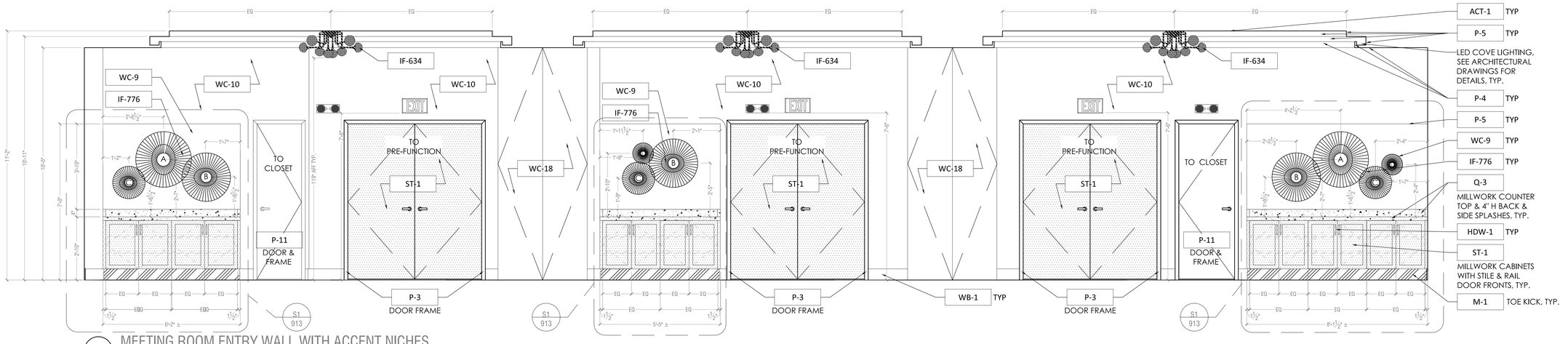

37 MEETING ROOM ENTRY WALL WITH ACCENT NICHES

SCALE: 1/2" = 1'-0"

4IA ARCHITECTS
4501 University Drive, Suite 130, Fairfax, VA. 22030
Telephone: (703)352-1933 Fax: (703)691-9171

THIS DRAWING & THE DESIGN SHOWN THEREON ARE THE PROPERTY OF 3HA ARCHITECTS. THE REPRODUCTION, COPYING, OR USE OF THIS DRAWING WITH OUT THEIR SPECIFIC WRITTEN CONSENT IS PROHIBITED & ANY INFRINGEMENT WILL BE SUBJECT TO LEGAL ACTION.

DESIGN DIRECTIONS INTERNATIONAL
266 Crescent Circle SW., Marietta, GA 30064
Office: (770)424-8419 | Project Manager Cell: (404)909-2529

THIS DRAWING IS THE PROPERTY OF DESIGN DIRECTIONS INTERNATIONAL AND IS NOT TO BE REPRODUCED OR COPIED WHOLE OR IN PART. IT IS ONLY TO BE USED FOR THE PROJECT AND SITE SPECIFICALLY INTENDED HEREIN, AND IS NOT TO BE USED ON ANY OTHER PROJECT. IT IS TO BE RETURNED UPON REQUEST. SCALES AS STATED HEREON ARE VALID ON THE ORIGINAL DRAWING. THE DIMENSIONS OF WHICH ARE 30" X 42" INCHES.

CLIENT: CHANTILLY HOTEL, LLC.
4335 CHANTILLY SHOPPING CENTER, CHANTILLY, VA 20151

ISSUES/REVISIONS

NO.	DATE:	REMARKS:
	10/26/2020	BID DOCUMENT SET
1	11/3/2020	BID DOCUMENT SET REVISIONS
2	1/4/2021	DESIGN REVIEW REVISIONS

PROJECT NAME: CROWNE PLAZA® HOTELS & RESORTS
4335 CHANTILLY SHOPPING CENTER
CHANTILLY, VA

DRAWING NAME
PUBLIC SPACE ELEVATIONS

SCALE	PROJECT NO.
AS NOTED	1903
DRAWN BY	DATE
KAK & DVE	10.2.2020

DRAWING NO.
ID-809

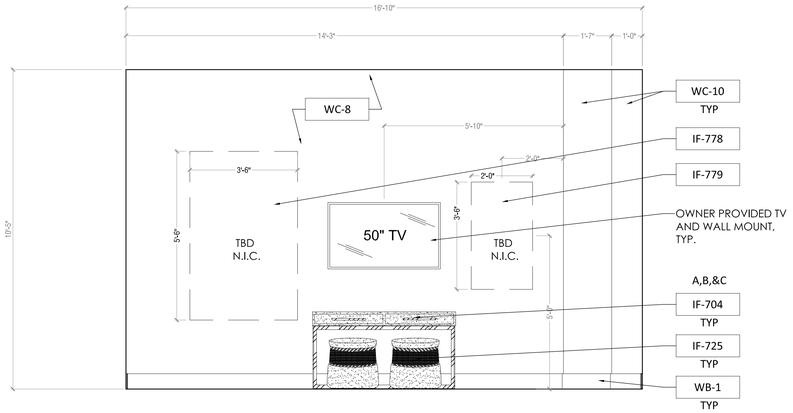

38 AGENT 99 / STUDIO 12 FOCAL WALL

SCALE: 1/2" = 1'-0"

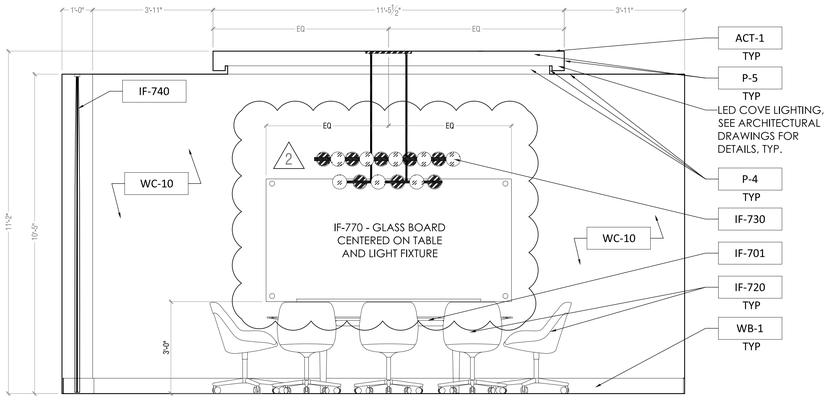

40 AGENT 99 / STUDIO 12 CONFERENCE AREA SIDE WALL

SCALE: 1/2" = 1'-0"

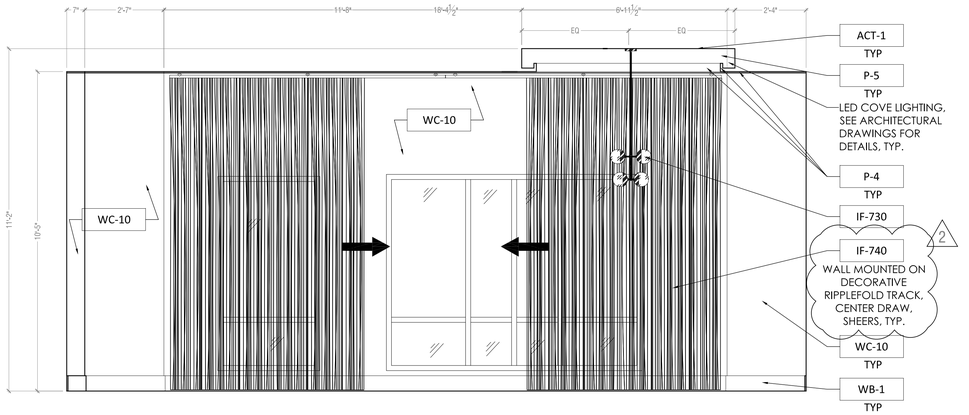

39 AGENT 99 / STUDIO 12 WINDOW WALL

SCALE: 1/2" = 1'-0"

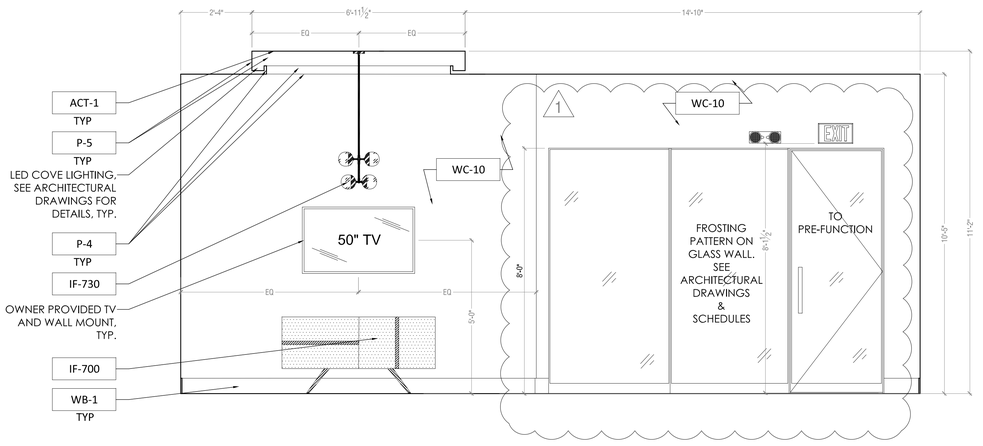

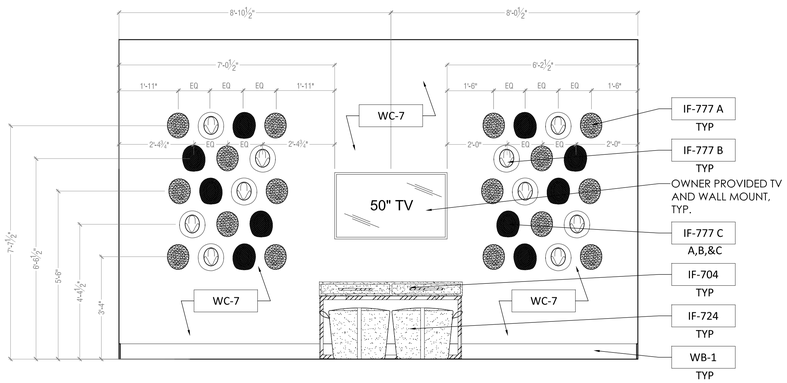

42 007 STUDIO / STUDIO 13 FOCAL WALL

SCALE: 1/2" = 1'-0"

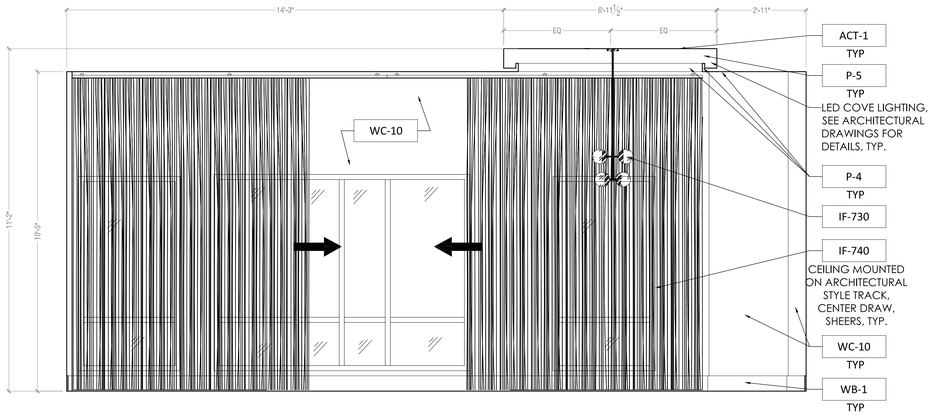

43 007 STUDIO / STUDIO 13 WINDOW WALL

SCALE: 1/2" = 1'-0"

4JA ARCHITECTS
4501 University Drive, Suite 130, Fairfax, VA. 22030
Telephone: (703)352-1933 Fax: (703)691-9171

THIS DRAWING & THE DESIGN SHOWN THEREON ARE THE PROPERTY OF 2HA ARCHITECTS. THE REPRODUCTION, COPYING, OR USE OF THIS DRAWING WITH OUT THEIR SPECIFIC WRITTEN CONSENT IS PROHIBITED & ANY INFRINGEMENT WILL BE SUBJECT TO LEGAL ACTION.

DESIGN DIRECTIONS INTERNATIONAL
266 Crescent Circle SW., Marietta, GA 30064
Office: (770)424-8419 | Project Manager Cell: (404)909-2529

THIS DRAWING IS THE PROPERTY OF DESIGN DIRECTIONS INTERNATIONAL AND IS NOT TO BE REPRODUCED OR COPIED WHOLE OR IN PART. IT IS ONLY TO BE USED FOR THE PROJECT AND SITE SPECIFICALLY INTENDED HEREIN, AND IS NOT TO BE USED ON ANY OTHER PROJECT. IT IS TO BE RETURNED UPON REQUEST. SCALES AS STATED HEREON ARE VALID ON THE ORIGINAL DRAWING. THE DIMENSIONS OF WHICH ARE 30" X 42" INCHES.

CLIENT:
CHANTILLY HOTEL, LLC.
4335 CHANTILLY SHOPPING CENTER,
CHANTILLY, VA 20151

ISSUES/REVISIONS

NO.	DATE:	REMARKS:
	10/26/2020	BID DOCUMENT SET
1	11/3/2020	BID DOCUMENT SET REVISIONS
2	1/4/2021	DESIGN REVIEW REVISIONS

PROJECT NAME:
CROWNE PLAZA® HOTELS & RESORTS
4335 CHANTILLY SHOPPING CENTER
CHANTILLY, VA

DRAWING NAME
PUBLIC SPACE
ELEVATIONS

SCALE	PROJECT NO.
AS NOTED	1903
DRAWN BY	DATE
KAK & DVE	10.2.2020

DRAWING NO.
ID-810

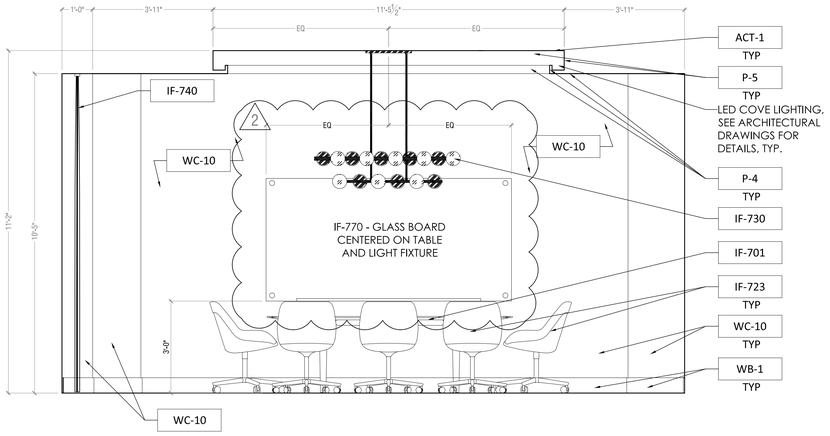

44 007 STUDIO / STUDIO 13 CONFERENCE AREA SIDE WALL

SCALE: 1/2" = 1'-0"

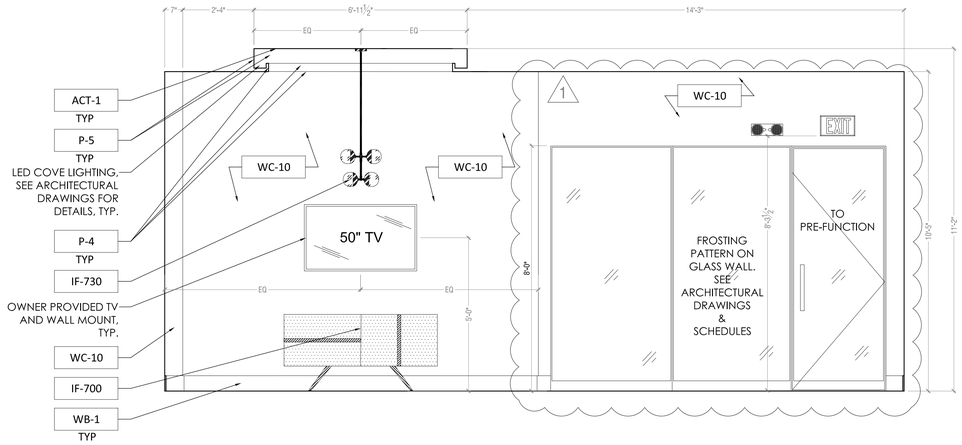

45 007 STUDIO / STUDIO 13 CONFERENCE MEDIA & ENTRY WALL

SCALE: 1/2" = 1'-0"

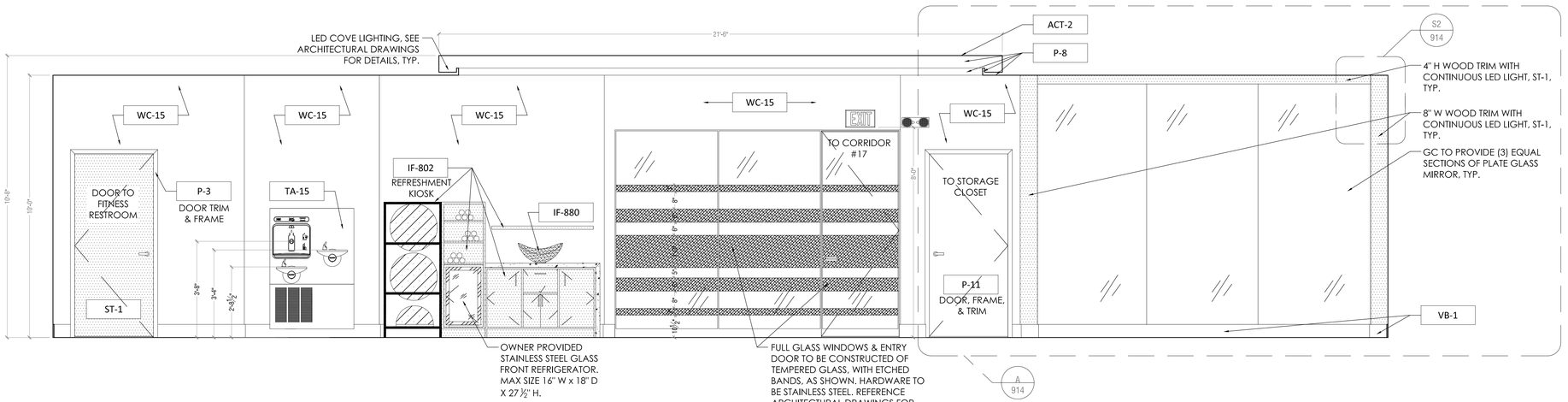

46 FITNESS CENTER ENTRY/REFRESHMENT KIOSIK

SCALE: 1/2" = 1'-0"

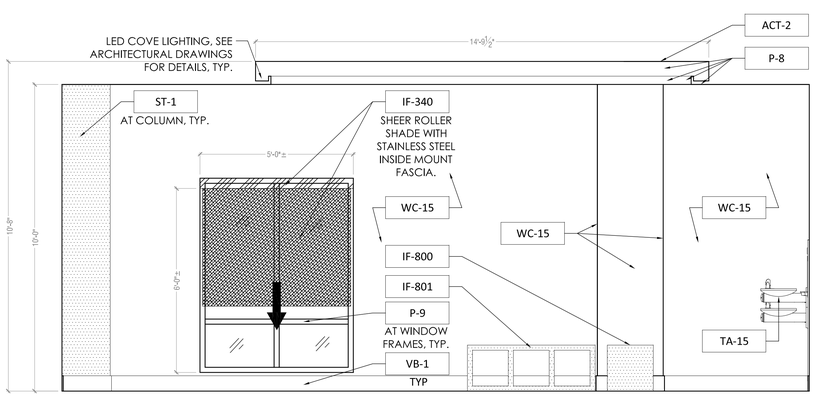

47 FITNESS CENTER SIDE WALL

SCALE: 1/2" = 1'-0"

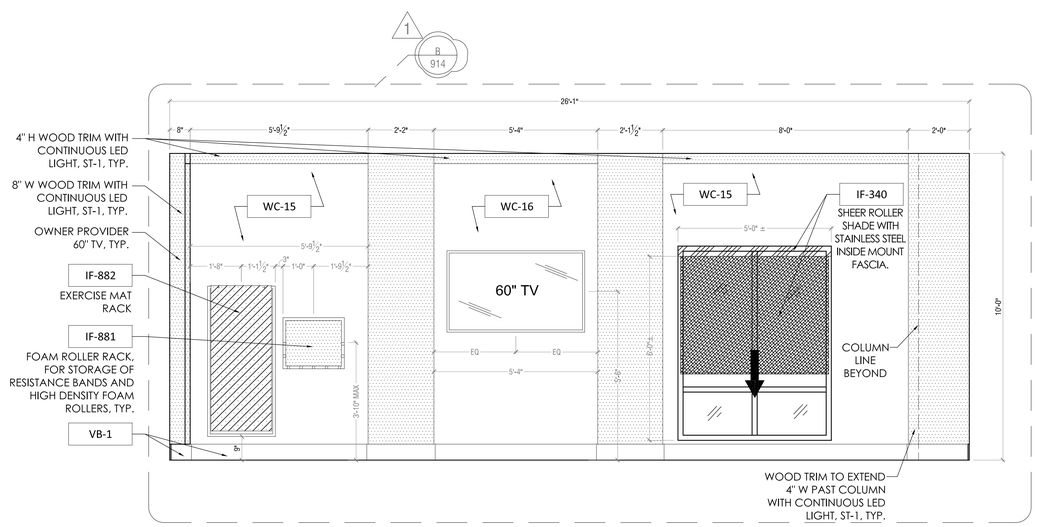

48 FITNESS CENTER TV/ACCENT WALL

SCALE: 1/2" = 1'-0"

4IA ARCHITECTS
4501 University Drive, Suite 130, Fairfax, VA. 22030
Telephone: (703)352-1933 Fax: (703)691-9171

THIS DRAWING & THE DESIGN SHOWN THEREON ARE THE PROPERTY OF 3HA ARCHITECTS. THE REPRODUCTION, COPYING, OR USE OF THIS DRAWING WITH OUT THEIR SPECIFIC WRITTEN CONSENT IS PROHIBITED & ANY INFRINGEMENT WILL BE SUBJECT TO LEGAL ACTION.

DESIGN DIRECTIONS INTERNATIONAL
266 Crescent Circle SW., Marietta, GA 30064
Office: (770)424-8419 | Project Manager Cell: (404)909-2529

THIS DRAWING IS THE PROPERTY OF DESIGN DIRECTIONS INTERNATIONAL AND IS NOT TO BE REPRODUCED OR COPIED WHOLE OR IN PART. IT IS ONLY TO BE USED FOR THE PROJECT AND SITE SPECIFICALLY INTENDED HERBIN, AND IS NOT TO BE USED ON ANY OTHER PROJECT. IT IS TO BE RETURNED UPON REQUEST. SCALES AS STATED HEREON ARE VALID ON THE ORIGINAL DRAWING. THE DIMENSIONS OF WHICH ARE 30" X 42" INCHES.

CLIENT: CHANTILLY HOTEL, LLC.
4335 CHANTILLY SHOPPING CENTER,
CHANTILLY, VA 20151

ISSUES/REVISIONS

NO.	DATE:	REMARKS:
	10/26/2020	BID DOCUMENT SET
1	11/3/2020	BID DOCUMENT SET REVISIONS
2	1/4/2021	DESIGN REVIEW REVISIONS

PROJECT NAME: CROWNE PLAZA® HOTELS & RESORTS
4335 CHANTILLY SHOPPING CENTER
CHANTILLY, VA

DRAWING NAME: PUBLIC SPACE ELEVATIONS

SCALE	PROJECT NO.
AS NOTED	1903
DRAWN BY	DATE
KAK & DVE	10.2.2020

DRAWING NO.
ID-811

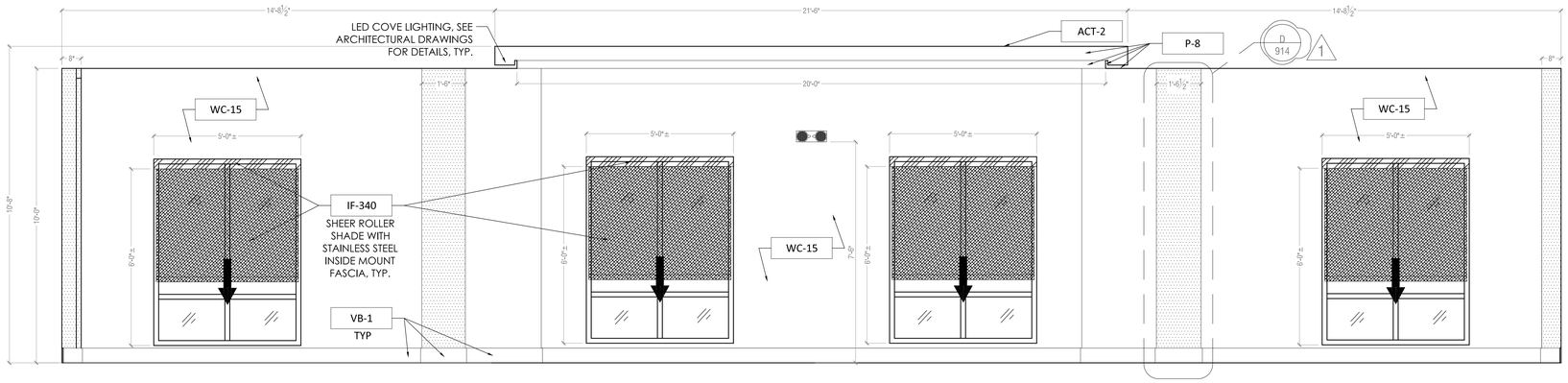

49 FITNESS CENTER WINDOW WALL

SCALE: 1/2" = 1'-0"

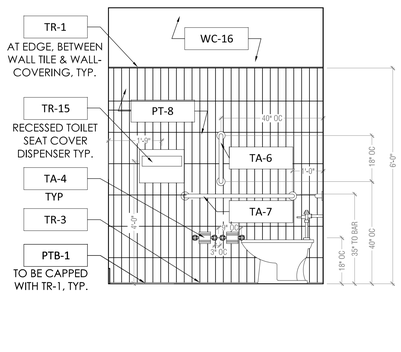

50 FITNESS RESTROOM SIDE WALL

SCALE: 1/2" = 1'-0"

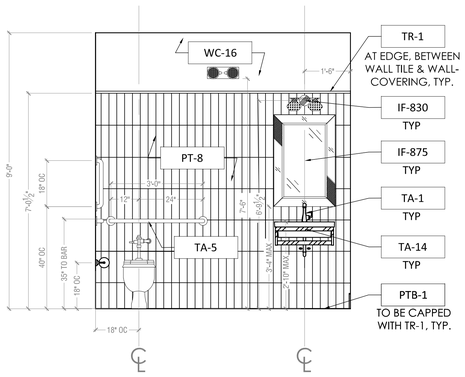

51 FITNESS RESTROOM VANITY WALL

SCALE: 1/2" = 1'-0"

GENERAL NOTES:

1. ALL LAV EXPOSED PLUMBING AT UNDERSIDE OF VANITIES TO CONSIST OF NEW, GOLD OR SILVER, UPSCALE PIPING. NO PVC IS ALLOWED.
2. GC TO ENSURE THAT ALL ADA COMPLIANCE IS MET AND VERIFIED BY THE ARCHITECT OF RECORD.

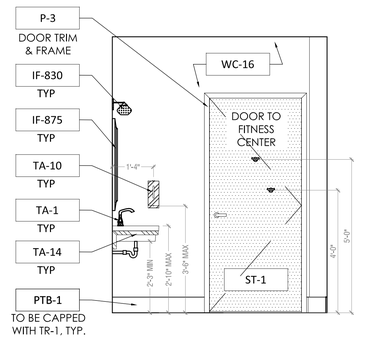

52 FITNESS RESTROOM ENTRY WALL

SCALE: 1/2" = 1'-0"

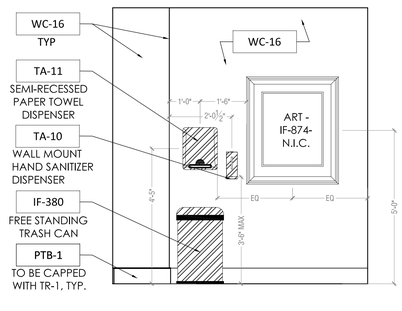

53 FIT TOILET TOILERY ITEMS

SCALE: 1/2" = 1'-0"

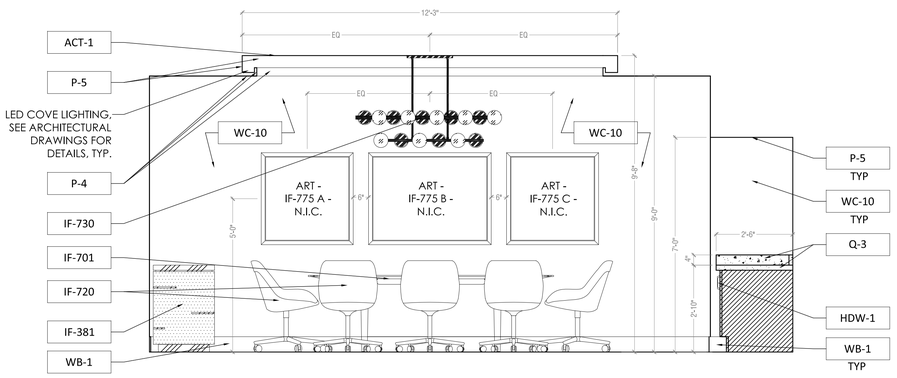

54 CONFERENCE ROOM ARTWORK WALL

SCALE: 1/2" = 1'-0"

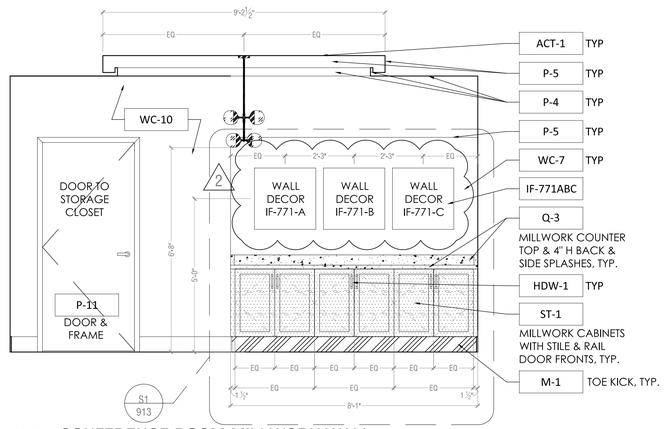

55 CONFERENCE ROOM MILLWORK WALL

SCALE: 1/2" = 1'-0"

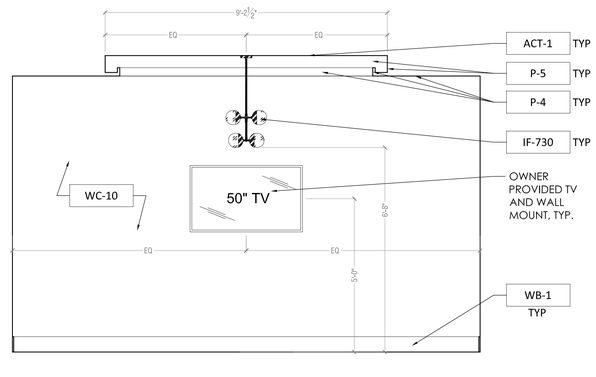

56 CONFERENCE ROOM TV WALL

SCALE: 1/2" = 1'-0"

4JA ARCHITECTS
4531 University Drive, Suite 130, Fairfax, VA. 22030
Telephone: (703)352-1933 Fax: (703)691-9171

THIS DRAWING & THE DESIGN SHOWN THEREON ARE THE PROPERTY OF 3HA ARCHITECTS. THE REPRODUCTION, COPYING, OR USE OF THIS DRAWING WITH OUT THEIR SPECIFIC WRITTEN CONSENT IS PROHIBITED & ANY INFRINGEMENT WILL BE SUBJECT TO LEGAL ACTION.

DESIGN DIRECTIONS INTERNATIONAL
266 Crescent Circle SW., Marietta, GA 30064
Office: (770)424-8419 | Project Manager Cell: (404)909-2529

THIS DRAWING IS THE PROPERTY OF DESIGN DIRECTIONS INTERNATIONAL AND IS NOT TO BE REPRODUCED OR COPIED WHOLE OR IN PART. IT IS ONLY TO BE USED FOR THE PROJECT AND SITE SPECIFICALLY INTENDED HEREIN, AND IS NOT TO BE USED ON ANY OTHER PROJECT. IT IS TO BE RETURNED UPON REQUEST. SCALES AS STATED HEREON ARE VALID ON THE ORIGINAL DRAWING. THE DIMENSIONS OF WHICH ARE 30" X 42" INCHES.

CLIENT:
CHANTILLY HOTEL, LLC.
4335 CHANTILLY SHOPPING CENTER,
CHANTILLY, VA 20151

ISSUES/REVISIONS

NO.	DATE:	REMARKS:
	10/26/2020	BID DOCUMENT SET
1	11/3/2020	BID DOCUMENT SET REVISIONS
2	1/14/2021	DESIGN REVIEW REVISIONS

PROJECT NAME:
CROWNE PLAZA® HOTELS & RESORTS
4335 CHANTILLY SHOPPING CENTER
CHANTILLY, VA

DRAWING NAME
PUBLIC SPACE ELEVATIONS

SCALE	PROJECT NO.
AS NOTED	1903
DRAWN BY	DATE
KAK & DVE	10.2.2020

DRAWING NO.
ID-812

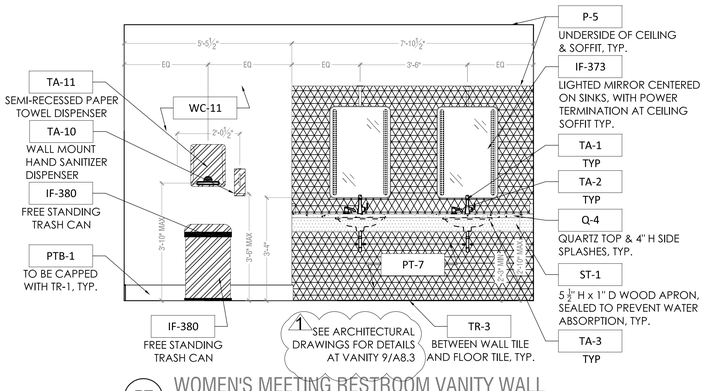

57 WOMEN'S MEETING RESTROOM VANITY WALL

SCALE: 1/2" = 1'-0"

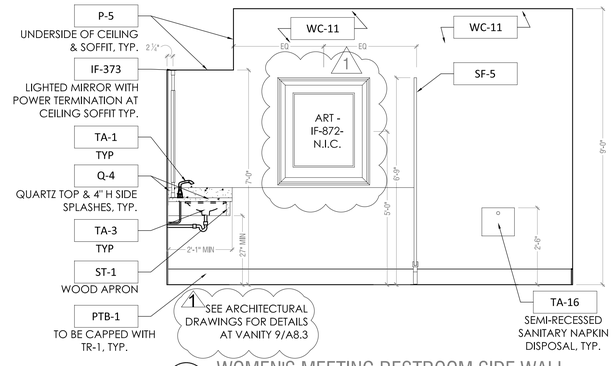

58 WOMEN'S MEETING RESTROOM SIDE WALL

SCALE: 1/2" = 1'-0"

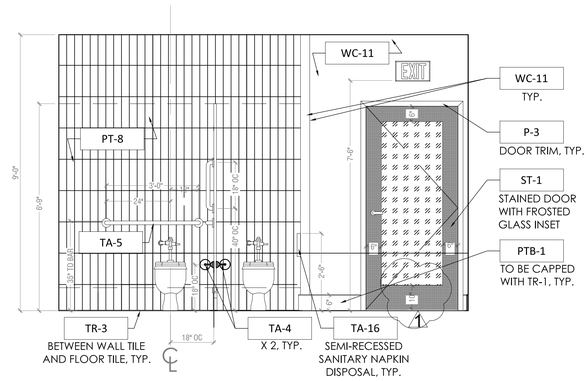

59 WOMEN'S MEETING RESTROOM WET & ENTRY WALL

SCALE: 1/2" = 1'-0"

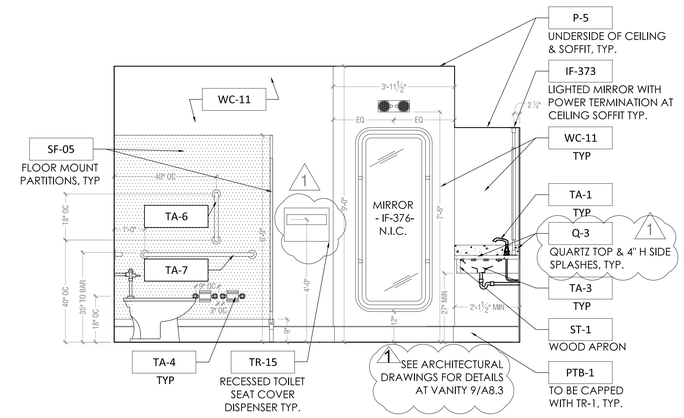

60 WOMEN'S MEETING RESTROOM SIDE WALL & ADA STALL

SCALE: 1/2" = 1'-0"

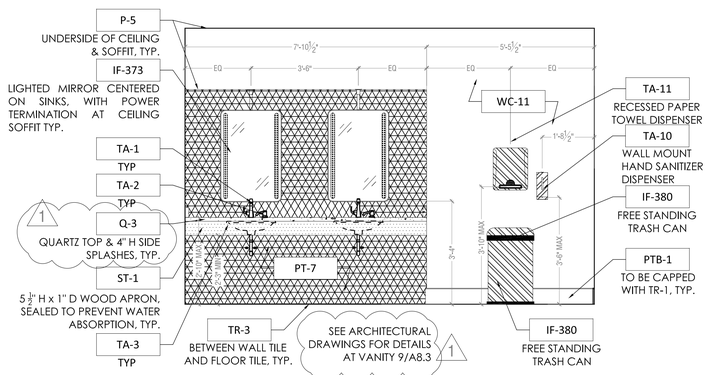

61 MEN'S MEETING RESTROOM VANITY WALL

SCALE: 1/2" = 1'-0"

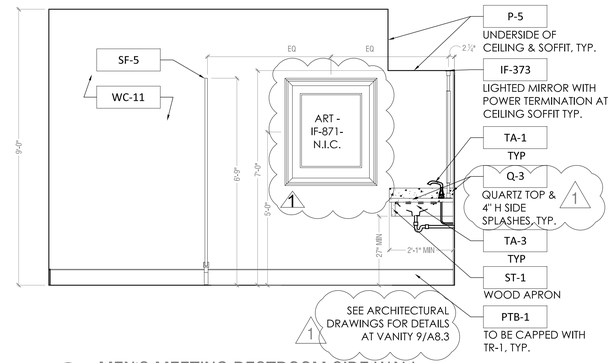

62 MEN'S MEETING RESTROOM SIDE WALL

SCALE: 1/2" = 1'-0"

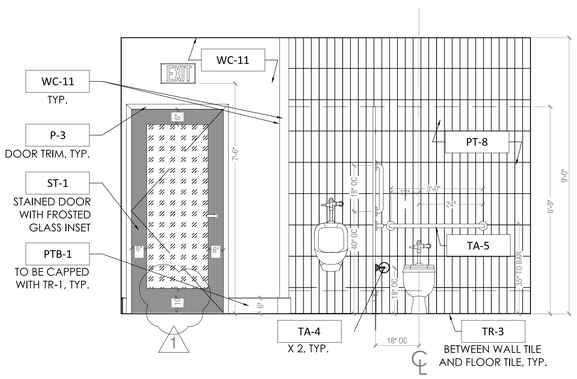

63 MEN'S MEETING RESTROOM WET & ENTRY WALL

SCALE: 1/2" = 1'-0"

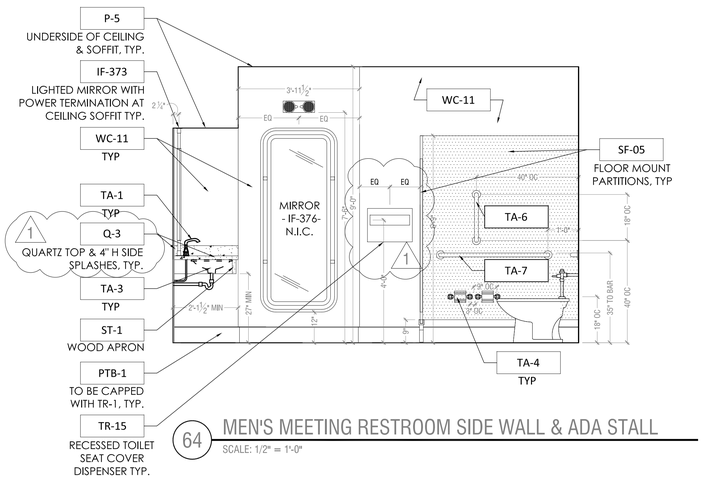

64 MEN'S MEETING RESTROOM SIDE WALL & ADA STALL

SCALE: 1/2" = 1'-0"

GENERAL NOTES:

1. ALL LAV EXPOSED PLUMBING AT UNDERSIDE OF VANITIES TO CONSIST OF NEW, GOLD OR SILVER, UPSCALE PIPING. NO PVC IS ALLOWED.
2. GC TO ENSURE THAT ALL ADA COMPLIANCE IS MET AND VERIFIED BY THE ARCHITECT OF RECORD.

4IA ARCHITECTS
4501 University Drive, Suite 120, Fairfax, VA. 22030
Telephone: (703)352-1933 Fax: (703)691-9171

DESIGN DIRECTIONS INTERNATIONAL
266 Crescent Circle SW., Marietta, GA 30064
Office: (770)424-8419 | Project Manager Cell: (404)909-2529

THIS DRAWING & THE DESIGN SHOWN THEREON ARE THE PROPERTY OF 2HA ARCHITECTS. THE REPRODUCTION, COPYING, OR USE OF THIS DRAWING WITH OUT THEIR SPECIFIC WRITTEN CONSENT IS PROHIBITED & ANY INFRINGEMENT WILL BE SUBJECT TO LEGAL ACTION.

THIS DRAWING IS THE PROPERTY OF DESIGN DIRECTIONS INTERNATIONAL AND IS NOT TO BE REPRODUCED OR COPIED WHOLE OR IN PART. IT IS ONLY TO BE USED FOR THE PROJECT AND SITE SPECIFICALLY INTENDED HEREIN, AND IS NOT TO BE USED ON ANY OTHER PROJECT. IT IS TO BE RETURNED UPON REQUEST. SCALES AS STATED HEREON ARE VALID ON THE ORIGINAL DRAWING. THE DIMENSIONS OF WHICH ARE 30" X 42" INCHES.

CLIENT: CHANTILLY HOTEL, LLC.
4335 CHANTILLY SHOPPING CENTER, CHANTILLY, VA 20151

ISSUES/REVISIONS

NO.	DATE:	REMARKS:
	10/26/2020	BID DOCUMENT SET
1	11/3/2020	BID DOCUMENT SET REVISIONS
2	1/4/2021	DESIGN REVIEW REVISIONS

PROJECT NAME: CROWNE PLAZA® HOTELS & RESORTS
4335 CHANTILLY SHOPPING CENTER
CHANTILLY, VA

DRAWING NAME
PUBLIC SPACE ELEVATIONS

SCALE	PROJECT NO.
AS NOTED	1903
DRAWN BY	DATE
KAK & DVE	10.2.2020

DRAWING NO.
ID-813

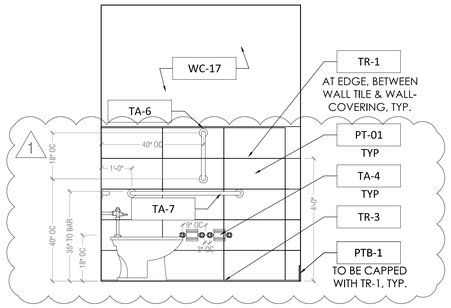

65 MENS EMPLOYEE RESTROOM SIDE WALL
SCALE: 1/2" = 1'-0"

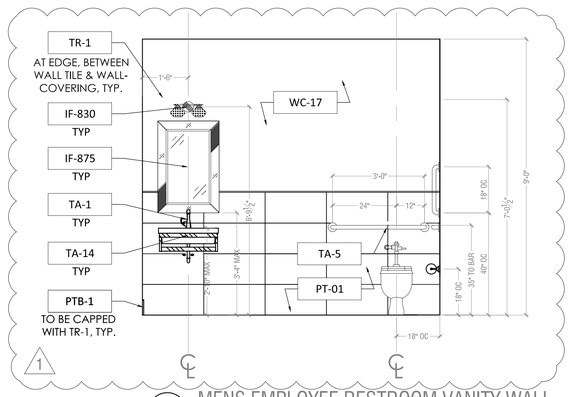

66 MENS EMPLOYEE RESTROOM VANITY WALL
SCALE: 1/2" = 1'-0"

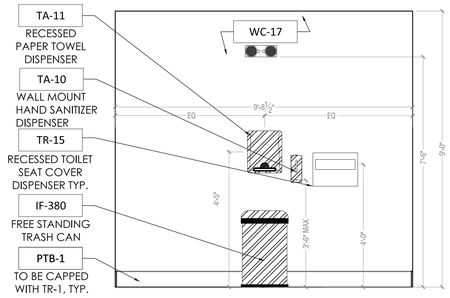

67 MENS EMPLOYEE RESTROOM TRASH WALL
SCALE: 1/2" = 1'-0"

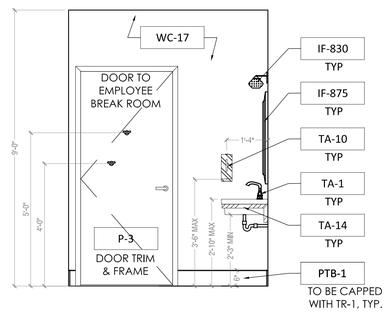

68 MENS EMP.TOILET ENTRY WALL
SCALE: 1/2" = 1'-0"

GENERAL NOTES:

1. ALL LAV EXPOSED PLUMBING AT UNDERSIDE OF VANITIES TO CONSIST OF NEW, GOLD OR SILVER, UPSCALE PIPING. NO PVC IS ALLOWED.
2. GC TO ENSURE THAT ALL ADA COMPLIANCE IS MET AND VERIFIED BY THE ARCHITECT OF RECORD.

2

70 WOMENS EMPLOYEE RESTROOM SIDE WALL
SCALE: 1/2" = 1'-0"

71 WOMENS EMPLOYEE RESTROOM VANITY WALL
SCALE: 1/2" = 1'-0"

72 WOMENS EMPLOYEE RESTROOM TRASH WALL
SCALE: 1/2" = 1'-0"

73 WOMENS EMP.TOILET ENTRY WALL
SCALE: 1/2" = 1'-0"

4IA ARCHITECTS
4031 University Drive, Suite 120, Fairfax, VA. 22030
Telephone: (703)352-1933 Fax: (703)691-9171

THIS DRAWING & THE DESIGN SHOWN THEREON ARE THE PROPERTY OF 2HA ARCHITECTS. THE REPRODUCTION, COPYING, OR USE OF THIS DRAWING WITH OUT THEIR SPECIFIC WRITTEN CONSENT IS PROHIBITED & ANY INFRINGEMENT WILL BE SUBJECT TO LEGAL ACTION.

DESIGN DIRECTIONS INTERNATIONAL
266 Crescent Circle SW., Marietta, GA 30064
Office: (770)424-8419 | Project Manager Cell: (404)909-2529

THIS DRAWING IS THE PROPERTY OF DESIGN DIRECTIONS INTERNATIONAL AND IS NOT TO BE REPRODUCED OR COPIED WHOLE OR IN PART. IT IS ONLY TO BE USED FOR THE PROJECT AND SITE SPECIFICALLY INTENDED HEREIN, AND IS NOT TO BE USED ON ANY OTHER PROJECT. IT IS TO BE RETURNED UPON REQUEST. SCALES AS STATED HEREON ARE VALID ON THE ORIGINAL DRAWING. THE DIMENSIONS OF WHICH ARE 30" X 42" INCHES.

CLIENT:
CHANTILLY HOTEL, LLC.
4335 CHANTILLY SHOPPING CENTER,
CHANTILLY, VA 20151

ISSUES/REVISIONS

NO.	DATE:	REMARKS:
	10/26/2020	BID DOCUMENT SET
1	11/3/2020	BID DOCUMENT SET REVISIONS
2	1/4/2021	DESIGN REVIEW REVISIONS

PROJECT NAME:
CROWNE PLAZA® HOTELS & RESORTS
4335 CHANTILLY SHOPPING CENTER
CHANTILLY, VA

DRAWING NAME
PUBLIC SPACE ELEVATIONS

SCALE	PROJECT NO.
AS NOTED	1903
DRAWN BY	DATE
KAK & DVE	10.2.2020

DRAWING NO.
ID-814

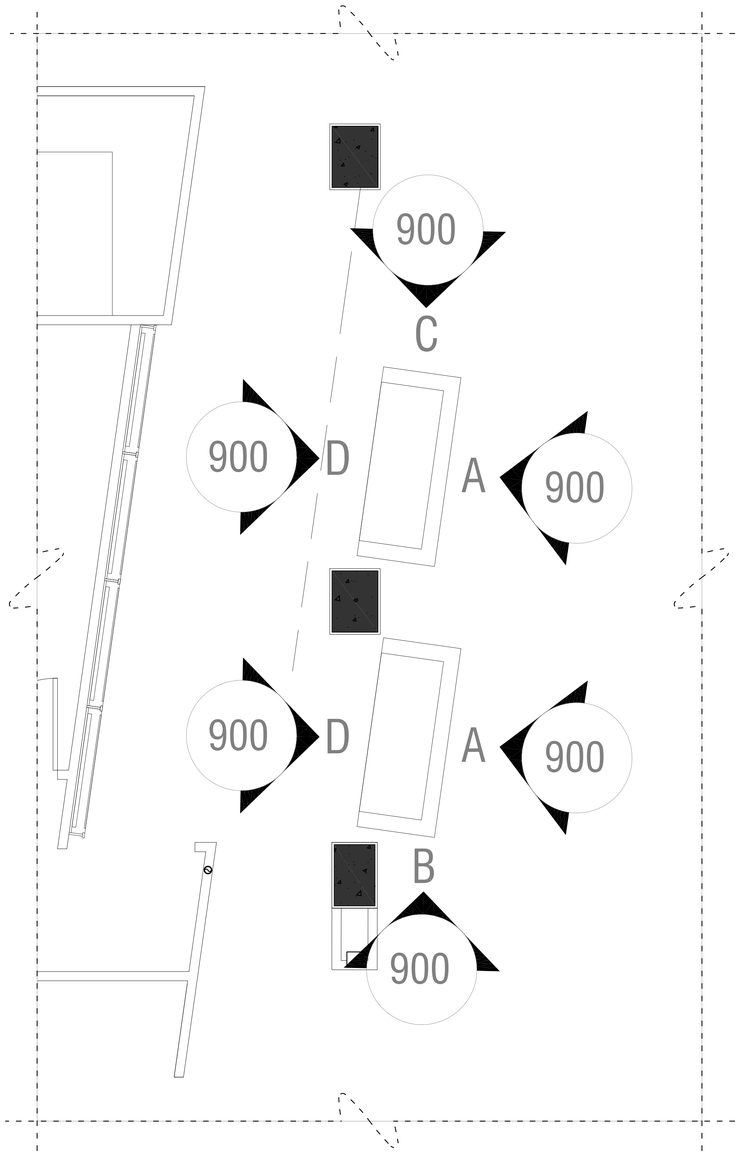

1 REGISTRATION FLOOR PLAN

SCALE: 3/4" = 1'-0"

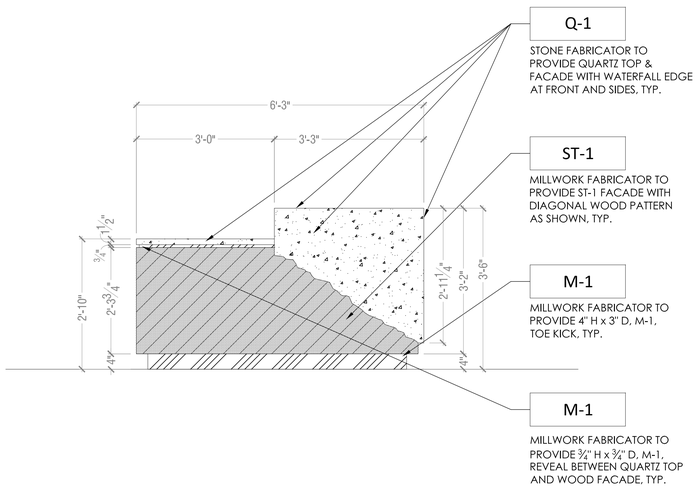

A REGISTRATION POD FRONT

SCALE: 3/4" = 1'-0"

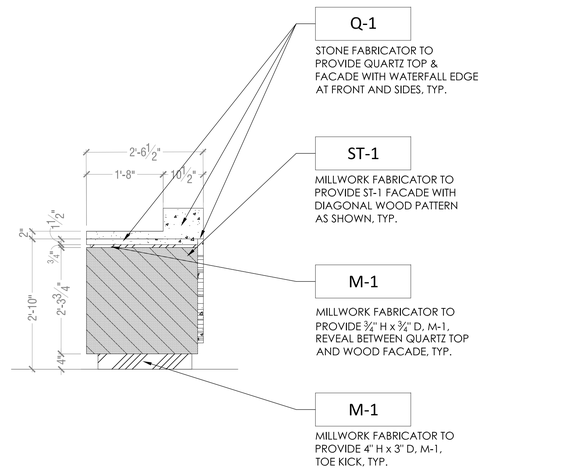

B REGISTRATION POD LEFT

SCALE: 3/4" = 1'-0"

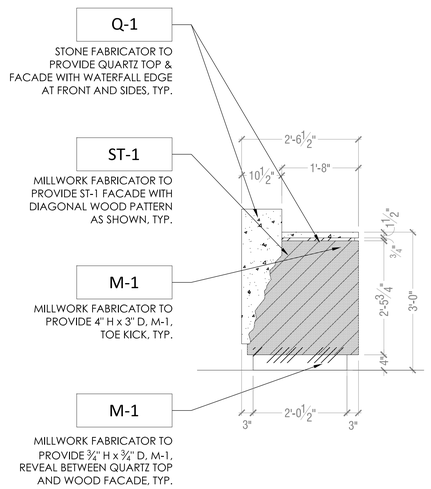

C REGISTRATION POD RIGHT

SCALE: 3/4" = 1'-0"

MILLWORK FABRICATOR NOTES:

GENERAL NOTE: ALL EXPOSED SURFACES AT BACK SIDE OF MILLWORK, U.N.O. TO BE PL-1, TYP. ALL INTERIOR PORTIONS OF DRAWERS & CABINETS TO BE PL-2, TYP. ALL QUARTS TOPS TO BE Q-1, TYP.

1. OWNER PROVIDED 20" FLAT SCREEN MONITOR (18.2"W x 7.3"D x 13.3" H) INSTALLED AT AN ANGLE, TYP.
2. OWNER PROVIDED CPU COMPUTER TOWER, (3.9" W x 13.2" D x 15" H), ON SHELF WITH FULL EXTENSION GUIDES, SOFT CLOSE, TYP.
3. OWNER PROVIDED LASER PRINTER, 15"W x 14"D x 9" H
4. MILLWORK FABRICATOR TO PROVIDE LOCKABLE CASH DRAWER WITH FULL EXTENSION GUIDES AND PULL, TYP.
5. OWNER PROVIDED TRASH CAN (12.5"H x 8.25"W X 14.25" H), TYP.
6. MILLWORK FABRICATOR TO PROVIDE LOCKABLE FILE DRAWER ON FULL EXTENSION DRAWER GLIDES WITH SOFT CLOSE. PROVIDE BRACKET HOLDER FOR HANGING FILES, TYP.
7. MILLWORK FABRICATOR TO PROVIDE VENT SLOT AT TOE KICK, TYP.
8. MILLWORK FABRICATOR TO PROVIDE DRAWER WITH FULL EXTENSION GUIDES AND PULL, TYP.
9. MILLWORK FABRICATOR TO PROVIDE CABINET DOOR WITH CONCEALED HINGES, SOFT GLOSS, AND PULL, TYP.
10. MILLWORK FABRICATOR TO PROVIDE QUAD POWER OUTLET, DATA, & PHONE, COLOR TO BE BLACK, TYP.
11. MILLWORK FABRICATOR TO PROVIDE HORIZONTAL DUPLEX POWER OUTLET, COLOR TO BE WHITE, TYP.
12. MILLWORK FABRICATOR TO PROVIDE HORIZONTAL PHONE OUTLET, COLOR TO BE WHITE, TYP.

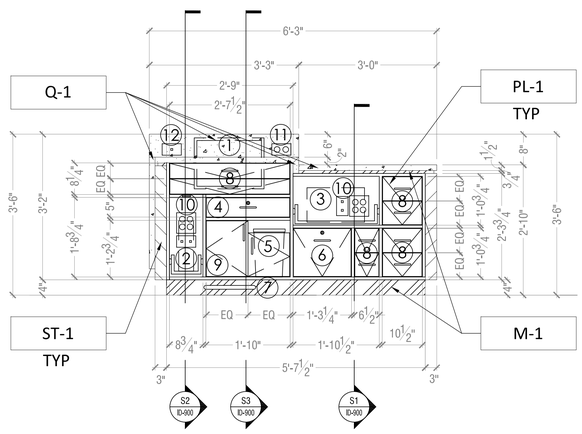

D REGISTRATION POD BACK

SCALE: 3/4" = 1'-0"

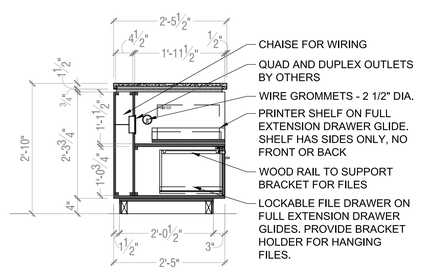

S1 REGISTRATION POD ADA COUNTER

SCALE: 3/4" = 1'-0"

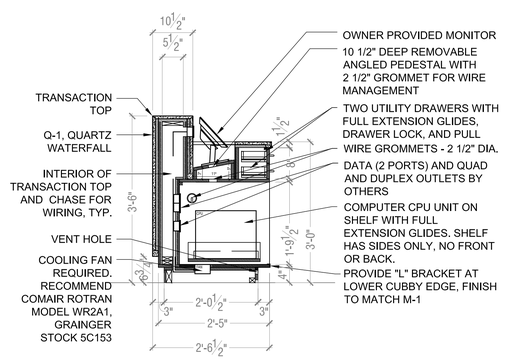

S2 REGISTRATION POD AT COMPUTER

SCALE: 3/4" = 1'-0"

CONSTRUCTION NOTES:

1. ALL CABINETS AND DRAWERS TO HAVE SAME KEYED LOCKS
2. ALL EXPOSED SURFACES OF REAR ELEVATION TO BE P. LAM. FINISH. ALL DOORS, SHELVES, DRAWERS, END CAPS TO HAVE 1MM EDGE BAND TO MATCH LAMINATE
3. INTERIOR CABINETS TO BE BLACK MELAMINE
4. ALL ELECTRICAL TO BE RUN IN CAVITY AND BACK OF MODULES TO BE PARTIAL (NOT FULL BACK TO ALLOW FOR MODULES TO BE EASILY SLID IN TO PLACE AFTER ELECTRICAL IS COMPLETE
5. DRAWER CONSTRUCTION - SIDES OF BOX ARE FRENCH DOVETAILED INTO FRONT, BACK IS THROUGH DADOED INTO SIDES, DRAWER BOTTOM IS MELAMINE, SIDES WOOD
6. ALL DRAWER AND SHELF GLIDES TO BE FULL EXTENSION SOFT CLOSE UNITS - KV8450 OR EQUAL
7. MILLWORK MANUFACTURER TO VERIFY ALL COMPUTER HARDWARE SIZES BEFORE BEGINNING
8. ALL EQUIPMENT TO BE SUPPLIED BY OWNER THROUGH IHG

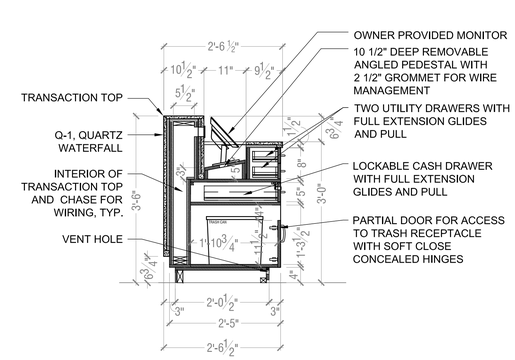

S3 REGISTRATION POD AT TRASH

SCALE: 3/4" = 1'-0"

ARCHITECTS
4501 University Drive, Suite 130, Fairfax, VA. 22030
Telephone: (703)352-1933 Fax: (703)691-9171

THIS DRAWING & THE DESIGN SHOWN THEREON ARE THE PROPERTY OF JHA ARCHITECTS. THE REPRODUCTION, COPYING, OR USE OF THIS DRAWING WITH OUT THEIR SPECIFIC WRITTEN CONSENT IS PROHIBITED & ANY INFRINGEMENT WILL BE SUBJECT TO LEGAL ACTION.

DESIGN DIRECTIONS INTERNATIONAL
266 Crescent Circle SW., Marietta, GA 30064
Office: (770)424-8419 | Project Manager Cell: (404)909-2529

THIS DRAWING IS THE PROPERTY OF DESIGN DIRECTIONS INTERNATIONAL AND IS NOT TO BE REPRODUCED OR COPIED WHOLE OR IN PART. IT IS ONLY TO BE USED FOR THE PROJECT AND SITE SPECIFICALLY INTENDED HEREIN, AND IS NOT TO BE USED ON ANY OTHER PROJECT. IT IS TO BE RETURNED UPON REQUEST. SCALES AS STATED HEREON ARE VALID ON THE ORIGINAL DRAWING. THE DIMENSIONS OF WHICH ARE 30" X 42" INCHES.

CLIENT:
CHANTILLY HOTEL, LLC.
4335 CHANTILLY SHOPPING CENTER,
CHANTILLY, VA 20151

ISSUES/REVISIONS

NO.	DATE:	REMARKS:
	10/26/2020	BID DOCUMENT SET
1	11/3/2020	BID DOCUMENT SET REVISIONS
2	1/4/2021	DESIGN REVIEW REVISIONS

PROJECT NAME:
CROWNE PLAZA® HOTELS & RESORTS
4335 CHANTILLY SHOPPING CENTER
CHANTILLY, VA

DRAWING NAME
REGISTRATION POD DETAILS

SCALE	PROJECT NO.
AS NOTED	1903
DRAWN BY	DATE
KAK & DVE	10.2.2020

DRAWING NO.
ID-900

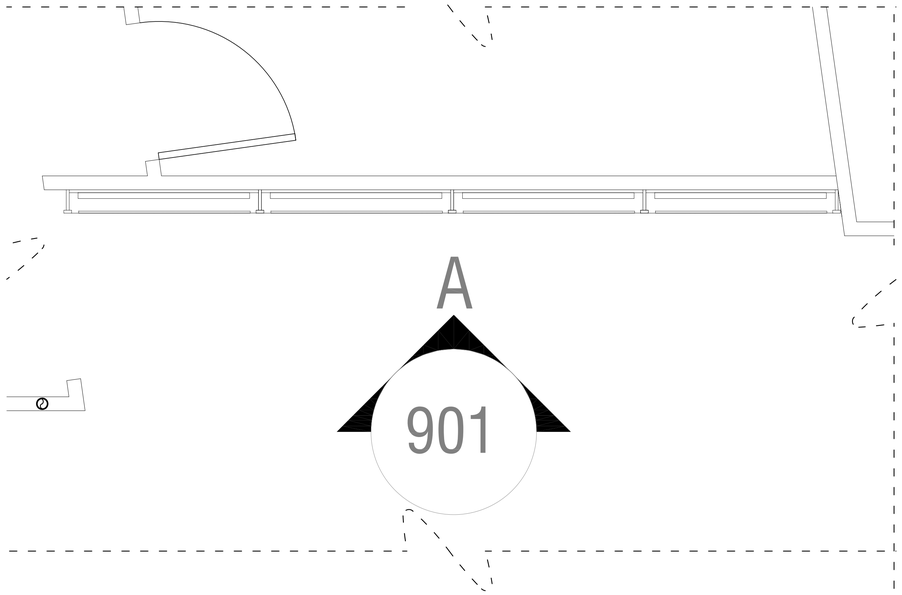

1 REGISTRATION FOCAL WALL PLAN

SCALE: 3/4" = 1'-0"

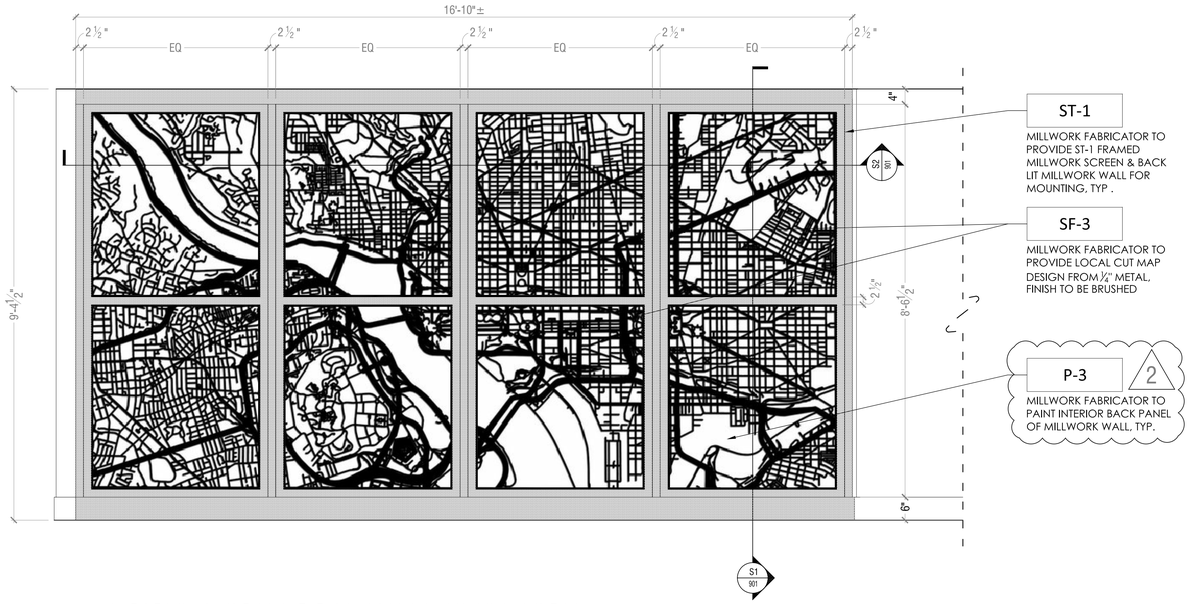

A REGISTRATION FOCAL WALL ELEVATION

SCALE: 3/4" = 1'-0"

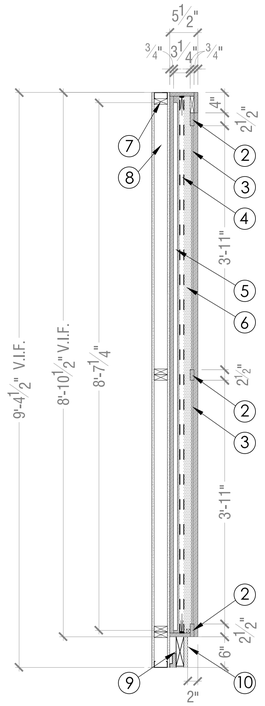

MILLWORK FABRICATOR NOTES:

GENERAL NOTE: MILLWORK FABRICATOR TO PROVIDE ALL DRAWINGS AND FINISH SAMPLES TO DESIGNER FOR REVIEW AND APPROVAL, PRIOR TO FABRICATION, TYP.

1. MILLWORK FABRICATOR TO PROVIDE 2" W x 1-1/2" D VERTICAL SUPPORT FRAME, ST-1, TYP.
2. MILLWORK FABRICATOR TO PROVIDE 2-1/2" W, ST-1, FRAME AROUND SF-3, METAL SCREENS, TYP.
3. MILLWORK FABRICATOR TO PROVIDE SF-3, **LOCAL CUT MAP DESIGN FROM 1/4" METAL, FINISH TO BE M-1, SEE FINISH SCHEDULE FOR ADDITIONAL DETAILS, TYP.**
4. MILLWORK FABRICATOR TO PROVIDE LED TAPE LIGHT, 3000 K, WITH DIFFUSER AT PERIMETER OF OPENING. MILLWORK FABRICATOR TO RECOMMEND PLACEMENT WITHIN WALL TO PROVIDE BEST BACK LIGHTING, TYP.
5. MILLWORK FABRICATOR TO PROVIDE, 45" W X ¾" D x 103" H BACK PANEL, FINISH TO BE P-10, TYP.
6. ALL VISIBLE PORTIONS OF INTERIOR OF MILLWORK WALL TO BE ST-1, U.N.O, TYP.
7. GC TO PROVIDE BLOCKING IN WALLS AS REQUIRED BY MILLWORK FABRICATOR, TYP.
8. INTERIOR PARTITION WALL PER ARCHITECTURAL DRAWINGS AND SCHEDULES, TYP.
9. WOOD CLEAT AS REQUIRED FOR LEVELING AND ANCHORING, TYP.
10. 6" H x 2" D, RECESSED TOE KICK, FINISH TO BE ST-1, TYP.

S1 REGISTRATION FOCAL WALL SECTION

SCALE: 3/4" = 1'-0"

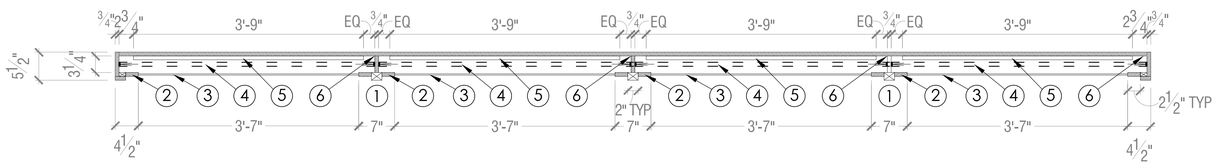

S2 REGISTRATION FOCAL WALL PLAN

SCALE: 3/4" = 1'-0"

4JA ARCHITECTS
4501 University Drive, Suite 120, Fairfax, VA. 22030
Telephone: (703)352-1933 Fax: (703)691-9171

THIS DRAWING & THE DESIGN SHOWN THEREON ARE THE PROPERTY OF JHA ARCHITECTS. THE REPRODUCTION, COPYING, OR USE OF THIS DRAWING WITH OUT THEIR SPECIFIC WRITTEN CONSENT IS PROHIBITED & ANY INFRINGEMENT WILL BE SUBJECT TO LEGAL ACTION.

DESIGN DIRECTIONS INTERNATIONAL
266 Crescent Circle SW., Marietta, GA 30064
Office: (770)424-8419 | Project Manager Cell: (404)909-2529

THIS DRAWING IS THE PROPERTY OF DESIGN DIRECTIONS INTERNATIONAL AND IS NOT TO BE REPRODUCED OR COPIED WHOLE OR IN PART. IT IS ONLY TO BE USED FOR THE PROJECT AND SITE SPECIFICALLY INTENDED HEREIN, AND IS NOT TO BE USED ON ANY OTHER PROJECT. IT IS TO BE RETURNED UPON REQUEST. SCALES AS STATED HEREON ARE VALID ON THE ORIGINAL DRAWING. THE DIMENSIONS OF WHICH ARE 30" X 42" INCHES.

CLIENT:
CHANTILLY HOTEL, LLC.
4335 CHANTILLY SHOPPING CENTER,
CHANTILLY, VA 20151

ISSUES/REVISIONS

NO.	DATE:	REMARKS:
	10/26/2020	BID DOCUMENT SET
1	11/3/2020	BID DOCUMENT SET REVISIONS
2	1/14/2021	DESIGN REVIEW REVISIONS

PROJECT NAME:
CROWNE PLAZA® HOTELS & RESORTS
4335 CHANTILLY SHOPPING CENTER
CHANTILLY, VA

DRAWING NAME
REGISTRATION FOCAL WALL DETAILS

SCALE	PROJECT NO.
AS NOTED	1903
DRAWN BY	DATE
KAK & DVE	10.2.2020

DRAWING NO.
ID-901

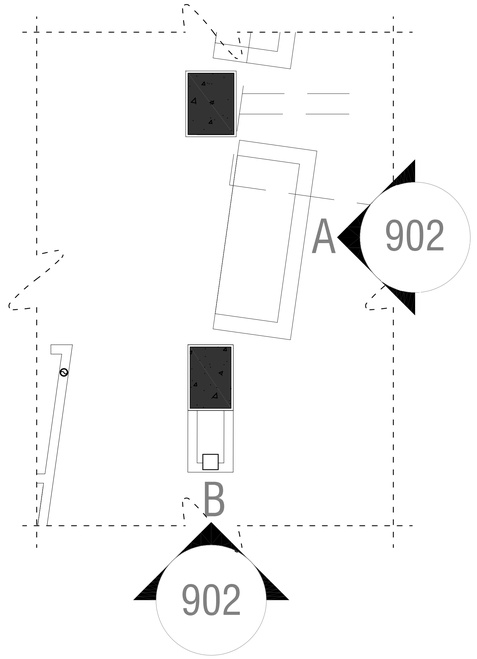

1 REGISTRATION COLUMNS PLAN

SCALE: 3/4" = 1'-0"

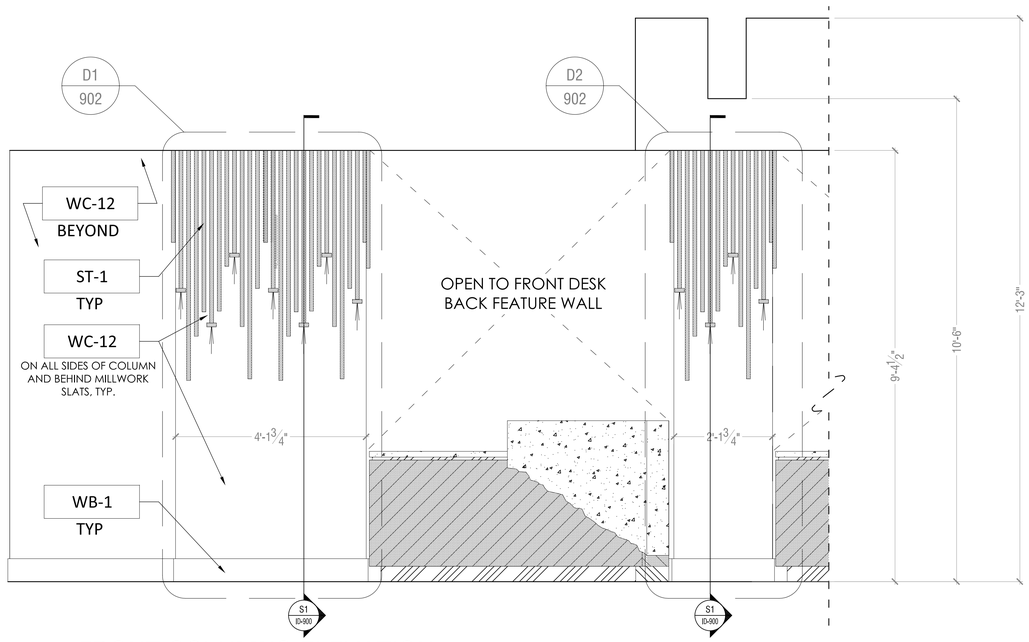

A FRONT COLUMNS ELEVATION

SCALE: 3/4" = 1'-0"

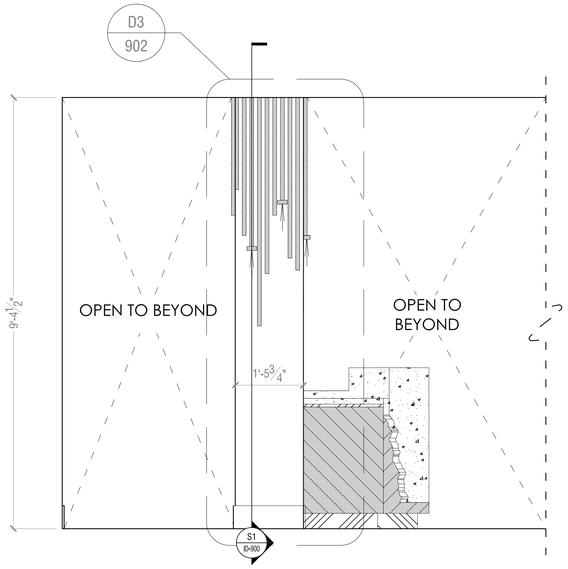

B SIDE COLUMN ELEVATION TYP

SCALE: 3/4" = 1'-0"

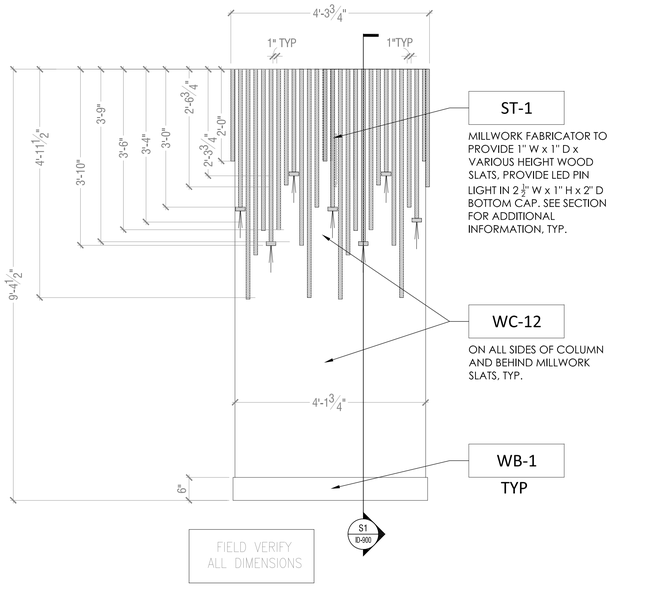

D1 FRONT LARGE COLUMN DETAIL

SCALE: 3/4" = 1'-0"

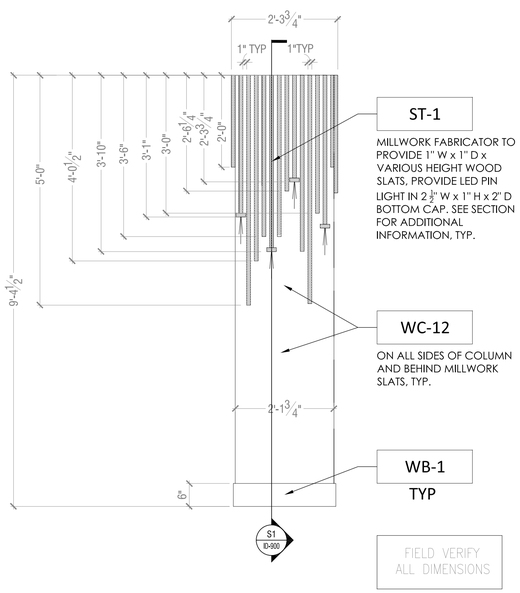

D2 FRONT STANDARD COLUMNS DETAIL

SCALE: 3/4" = 1'-0"

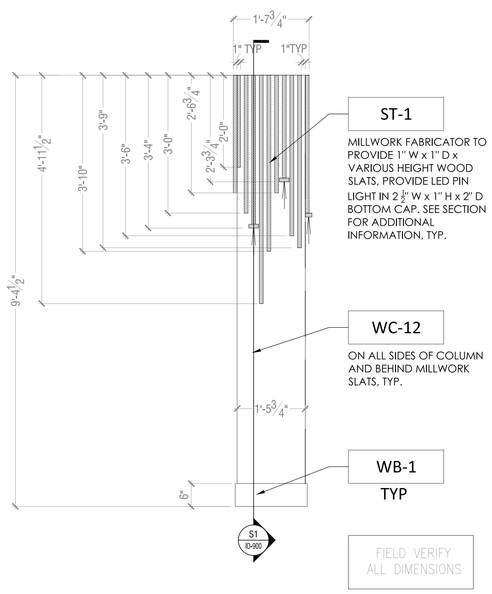

D3 SIDE COLUMN DETAIL TYP.

SCALE: 3/4" = 1'-0"

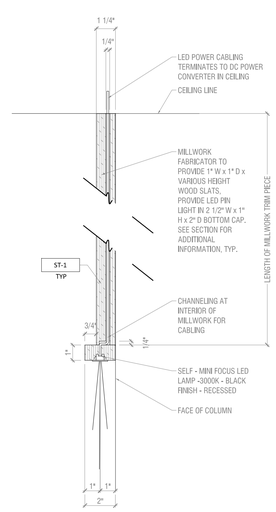

S1 SECTION SLAT & LED PIN LIGHT

SCALE: 3" = 1'-0"

LAMPING SPECIFICATION:
MANUFACTURER: SELF ELECTRONICS
MODEL NUMBER: MINIFOCUS-130K-B
DIAMETER: 1" DIA
CCT: 3000 KELVIN
FINISH: BLACK



I LAMPING IMAGE

SCALE: NTS

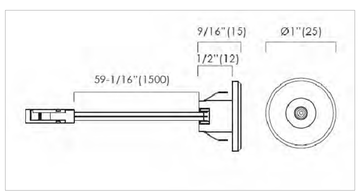

II LAMPING LINE DRAWING

SCALE: NTS

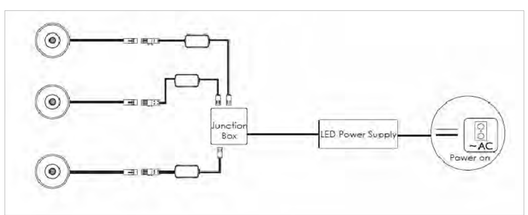

III LAMPING WIRING DIAGRAM

SCALE: NTS

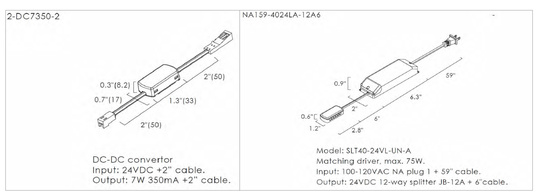

VI REQUIRED ACCESSORIES

SCALE: NTS

4IA ARCHITECTS
4501 University Drive, Suite 130, Fairfax, VA. 22030
Telephone: (703)352-1933 Fax: (703)691-9171

THIS DRAWING & THE DESIGN SHOWN THEREON ARE THE PROPERTY OF 2HA ARCHITECTS. THE REPRODUCTION, COPYING, OR USE OF THIS DRAWING WITH OUT THEIR SPECIFIC WRITTEN CONSENT IS PROHIBITED & ANY INFRINGEMENT WILL BE SUBJECT TO LEGAL ACTION.

DESIGN DIRECTIONS INTERNATIONAL
266 Crescent Circle SW., Marietta, GA 30064
Office: (770)424-8419 | Project Manager Cell: (404)909-2529

THIS DRAWING IS THE PROPERTY OF DESIGN DIRECTIONS INTERNATIONAL AND IS NOT TO BE REPRODUCED OR COPIED WHOLE OR IN PART. IT IS ONLY TO BE USED FOR THE PROJECT AND SITE SPECIFICALLY INTENDED HERBIN, AND IS NOT TO BE USED ON ANY OTHER PROJECT. IT IS TO BE RETURNED UPON REQUEST. SCALES AS STATED HEREON ARE VALID ON THE ORIGINAL DRAWING. THE DIMENSIONS OF WHICH ARE 30" X 42" INCHES.

CLIENT: CHANTILLY HOTEL, LLC.
4335 CHANTILLY SHOPPING CENTER
CHANTILLY, VA 20151

ISSUES/REVISIONS

NO.	DATE:	REMARKS:
	10/26/2020	BID DOCUMENT SET
1	11/3/2020	BID DOCUMENT SET REVISIONS
2	1/4/2021	DESIGN REVIEW REVISIONS

PROJECT NAME:
CROWNE PLAZA® HOTELS & RESORTS
4335 CHANTILLY SHOPPING CENTER
CHANTILLY, VA

DRAWING NAME
COLUMNS AT REGISTRATION DETAILS

SCALE	PROJECT NO.
AS NOTED	1903
DRAWN BY	DATE
KAK & DVE	10.2.2020

DRAWING NO.
ID-902

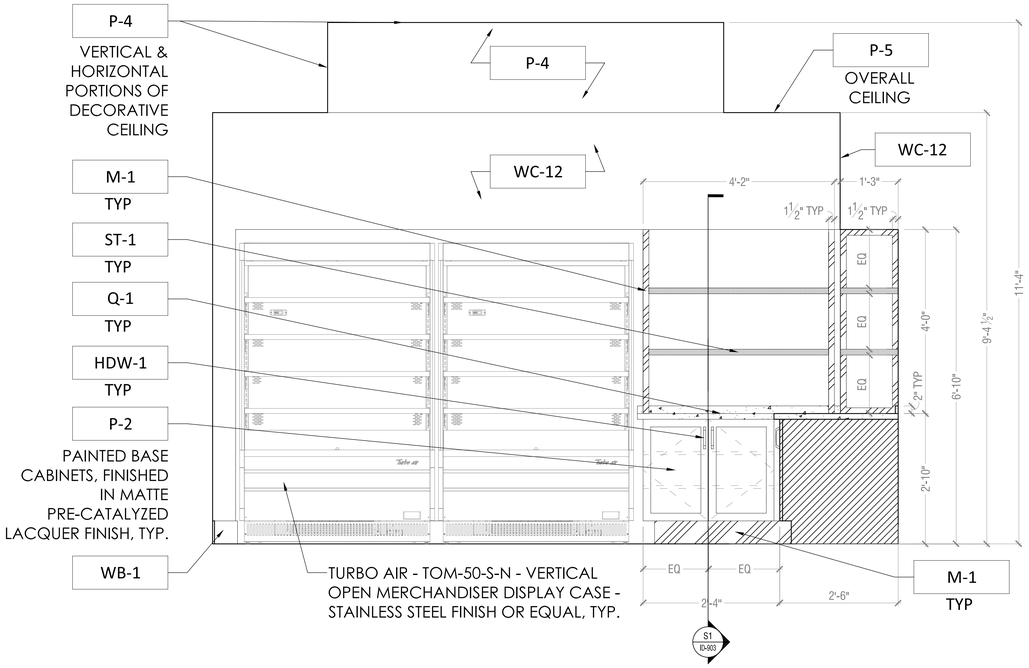

A MARKET MERCHANDISER & BACK WALL

SCALE: 3/4" = 1'-0"

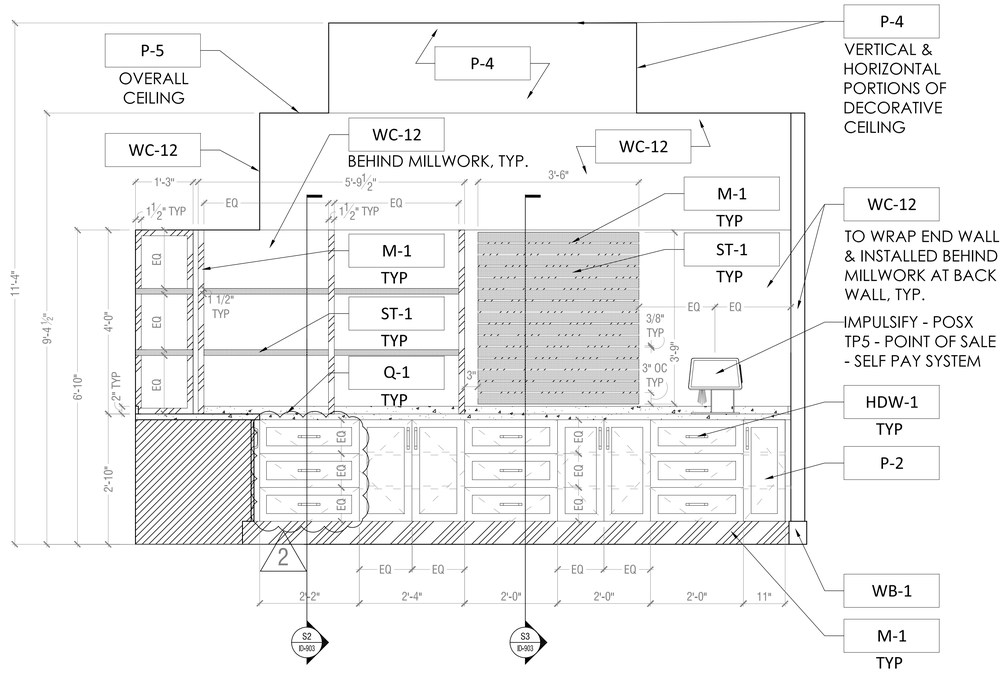

B MARKET MICROWAVE & SIDE WALL

SCALE: 3/4" = 1'-0"

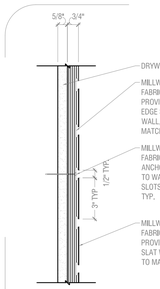

S4 SECTION SLAT WALL

SCALE: 3" = 1'-0"

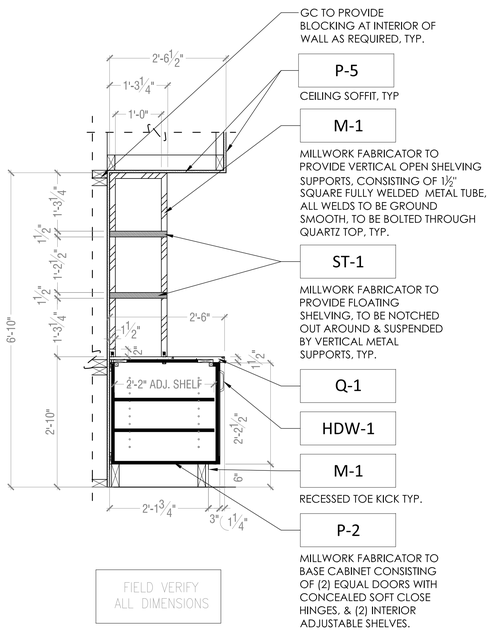

S1 MARKET SECTION

SCALE: 3/4" = 1'-0"

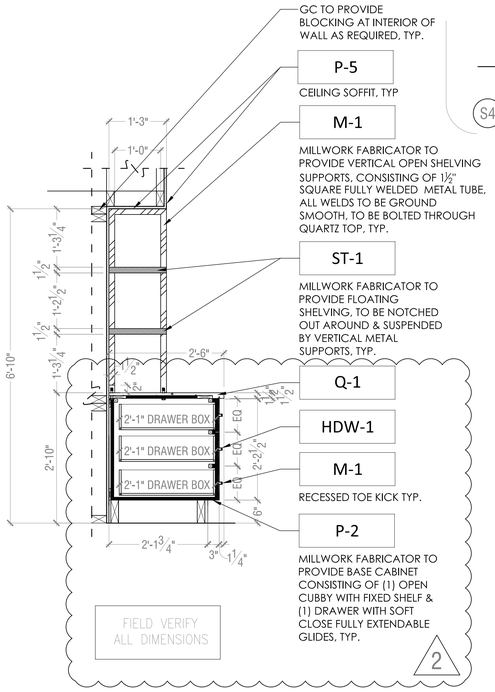

S2 MARKET SECTION

SCALE: 3/4" = 1'-0"

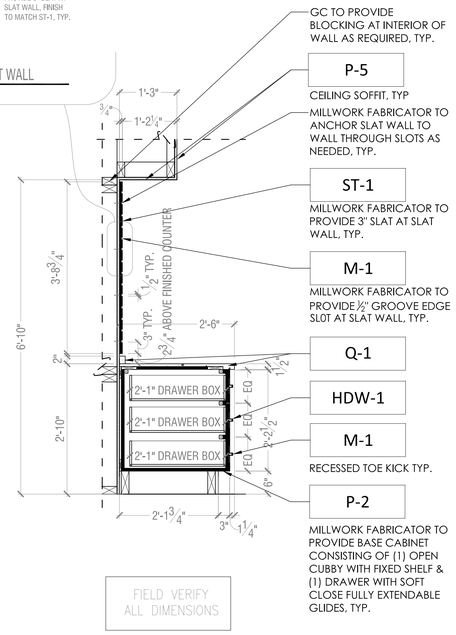

S3 MARKET SECTION

SCALE: 3/4" = 1'-0"

CONSTRUCTION NOTES:

1. ALL CABINETS AND DRAWERS TO HAVE SAME KEYED LOCKS
2. INTERIOR CABINETS TO BE BLACK MELAMINE
3. DRAWER CONSTRUCTION -SIDES OF BOX ARE FRENCH DOVETAILED INTO FRONT, BACK IS THROUGH DADOED INTO SIDES, DRAWER BOTTOM IS MELAMINE, SIDES WOOD
4. ALL DRAWER AND SHELF GLIDES TO BE FULL EXTENSION SOFT CLOSE UNITS - KV8450 OR EQUAL
5. MILLWORK MANUFACTURER TO VERIFY ALL EQUIPMENT SIZES BEFORE BEGINNING
6. ALL EQUIPMENT TO BE SUPPLIED BY OWNER THROUGH IHG PREFERRED VENDOR.

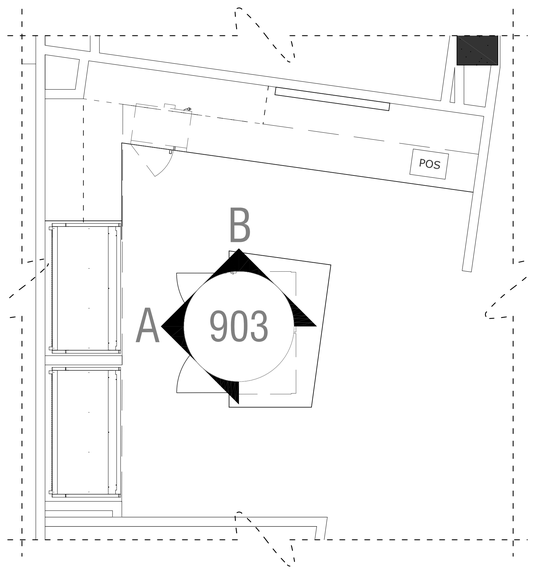

1 REGISTRATION COLUMNS PLAN

SCALE: 1/2" = 1'-0"

4IA ARCHITECTS
4501 University Drive, Suite 130, Fairfax, VA. 22030
Telephone: (703)352-1933 Fax: (703)691-9171

THIS DRAWING & THE DESIGN SHOWN THEREON ARE THE PROPERTY OF 3HA ARCHITECTS. THE REPRODUCTION, COPYING, OR USE OF THIS DRAWING WITH OUT THEIR SPECIFIC WRITTEN CONSENT IS PROHIBITED & ANY INFRINGEMENT WILL BE SUBJECT TO LEGAL ACTION.

DESIGN DIRECTIONS INTERNATIONAL
266 Crescent Circle SW., Marietta, GA 30064
Office: (770)424-8419 | Project Manager Cell: (404)909-2529

THIS DRAWING IS THE PROPERTY OF DESIGN DIRECTIONS INTERNATIONAL AND IS NOT TO BE REPRODUCED OR COPIED WHOLE OR IN PART. IT IS ONLY TO BE USED FOR THE PROJECT AND SITE SPECIFICALLY INTENDED HEREIN, AND IS NOT TO BE USED ON ANY OTHER PROJECT. IT IS TO BE RETURNED UPON REQUEST. SCALES AS STATED HEREON ARE VALID ON THE ORIGINAL DRAWING. THE DIMENSIONS OF WHICH ARE 30" X 42" INCHES.

CLIENT: CHANTILLY HOTEL, LLC.
4335 CHANTILLY SHOPPING CENTER, CHANTILLY, VA 20151

ISSUES/REVISIONS

NO.	DATE:	REMARKS:
	10/26/2020	BID DOCUMENT SET
1	11/3/2020	BID DOCUMENT SET REVISIONS
2	1/4/2021	DESIGN REVIEW REVISIONS

PROJECT NAME: CROWNE PLAZA® HOTELS & RESORTS
4335 CHANTILLY SHOPPING CENTER
CHANTILLY, VA

DRAWING NAME: MARKET MILLWORK DETAILS

SCALE	PROJECT NO.
AS NOTED	1903
DRAWN BY	DATE
KAK & DVE	10.2.2020

DRAWING NO.
ID-903

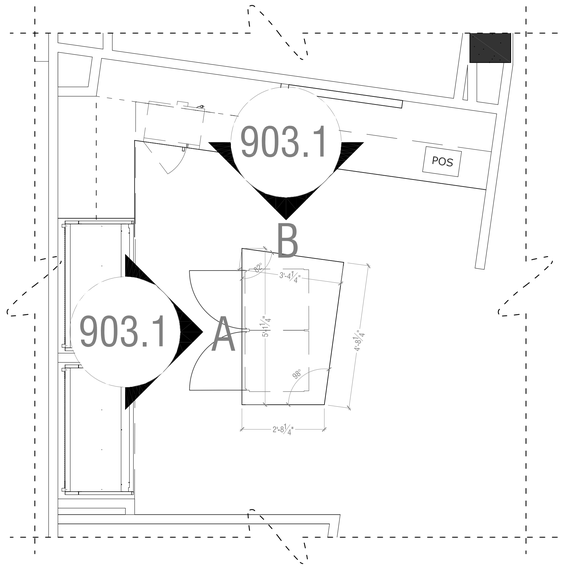

1 REGISTRATION COLUMNS PLAN

SCALE: 1/2" = 1'-0"

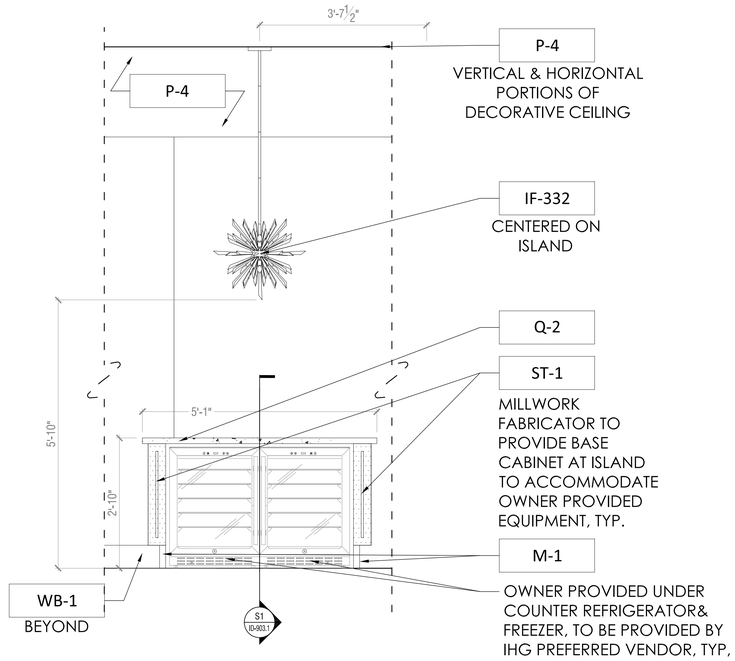

A MARKET ISLAND & UNDER COUNTER FRIDGE & FREEZER

SCALE: 1/2" = 1'-0"

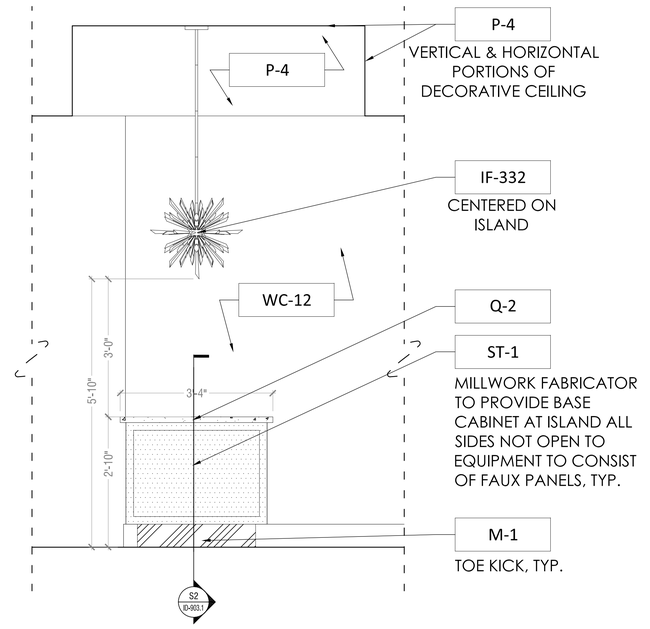

B MARKET ISLAND SIDE VIEW

SCALE: 1/2" = 1'-0"

CONSTRUCTION NOTES:

1. ALL CABINETS AND DRAWERS TO HAVE SAME KEYED LOCKS
2. INTERIOR CABINETS TO BE BLACK MELAMINE
3. DRAWER CONSTRUCTION -SIDES OF BOX ARE FRENCH DOVETAILED INTO FRONT, BACK IS THROUGH DADOED INTO SIDES, DRAWER BOTTOM IS MELAMINE, SIDES WOOD
4. ALL DRAWER AND SHELF GLIDES TO BE FULL EXTENSION SOFT CLOSE UNITS - KV8450 OR EQUAL
5. MILLWORK MANUFACTURER TO VERIFY ALL EQUIPMENT SIZES BEFORE BEGINNING
6. ALL EQUIPMENT TO BE SUPPLIED BY OWNER THROUGH IHG PREFERRED VENDOR.

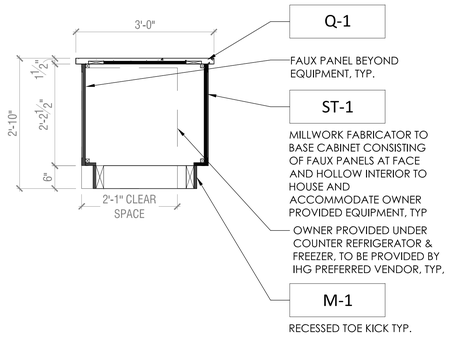

S1 MARKET ISLAND SECTION

SCALE: 3/4" = 1'-0"

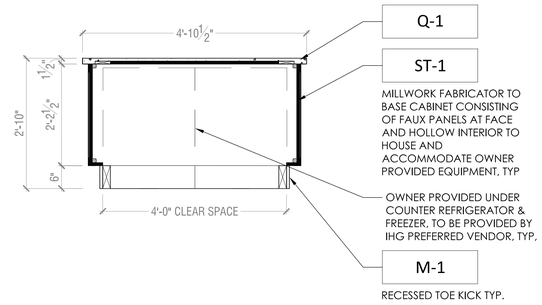

S2 MARKET ISLAND SECTION

SCALE: 3/4" = 1'-0"

4IA ARCHITECTS
4031 University Drive, Suite 120, Fairfax, VA. 22030
Telephone: (703)352-1933 Fax: (703)691-9171

THIS DRAWING & THE DESIGN SHOWN THEREON ARE THE PROPERTY OF 3HA ARCHITECTS. THE REPRODUCTION, COPYING, OR USE OF THIS DRAWING WITH OUT THEIR SPECIFIC WRITTEN CONSENT IS PROHIBITED & ANY INFRINGEMENT WILL BE SUBJECT TO LEGAL ACTION.

DESIGN DIRECTIONS INTERNATIONAL
266 Crescent Circle SW., Marietta, GA 30064
Office: (770)424-8419 | Project Manager Cell: (404)909-2529

THIS DRAWING IS THE PROPERTY OF DESIGN DIRECTIONS INTERNATIONAL AND IS NOT TO BE REPRODUCED OR COPIED WHOLE OR IN PART. IT IS ONLY TO BE USED FOR THE PROJECT AND SITE SPECIFICALLY INTENDED HEREIN, AND IS NOT TO BE USED ON ANY OTHER PROJECT. IT IS TO BE RETURNED UPON REQUEST. SCALES AS STATED HEREON ARE VALID ON THE ORIGINAL DRAWING. THE DIMENSIONS OF WHICH ARE 30" X 42" INCHES.

CLIENT:
CHANTILLY HOTEL, LLC.
4335 CHANTILLY SHOPPING CENTER,
CHANTILLY, VA 20151

ISSUES/REVISIONS

NO.	DATE:	REMARKS:
	10/26/2020	BID DOCUMENT SET
1	11/3/2020	BID DOCUMENT SET REVISIONS
2	1/4/2021	DESIGN REVIEW REVISIONS

PROJECT NAME:
CROWNE PLAZA® HOTELS & RESORTS
4335 CHANTILLY SHOPPING CENTER
CHANTILLY, VA

DRAWING NAME
MARKET MILLWORK DETAILS CONTINUED

1

SCALE	PROJECT NO.
AS NOTED	1903
DRAWN BY	DATE
KAK & DVE	10.2.2020

DRAWING NO.
ID-903.1

PRICING SET ONLY | NOT ISSUED FOR CONSTRUCTION

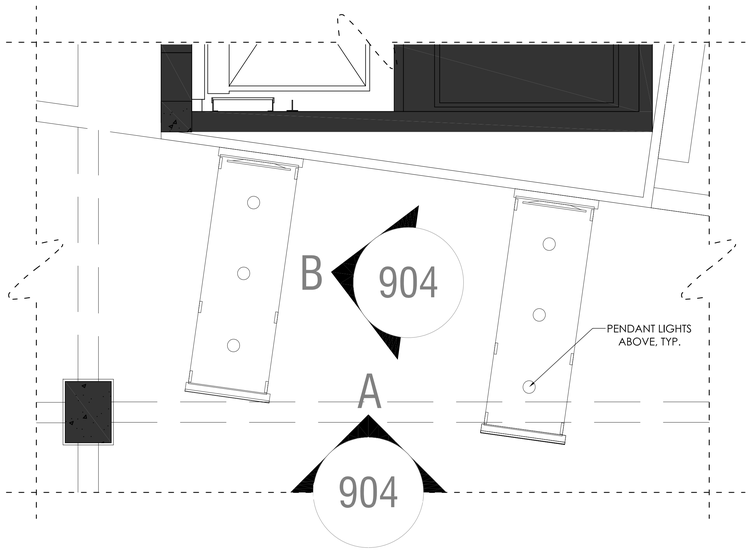

1 HUDDLE MILLWORK & FEATURE WALL PLAN

SCALE: 1/2" = 1'-0"

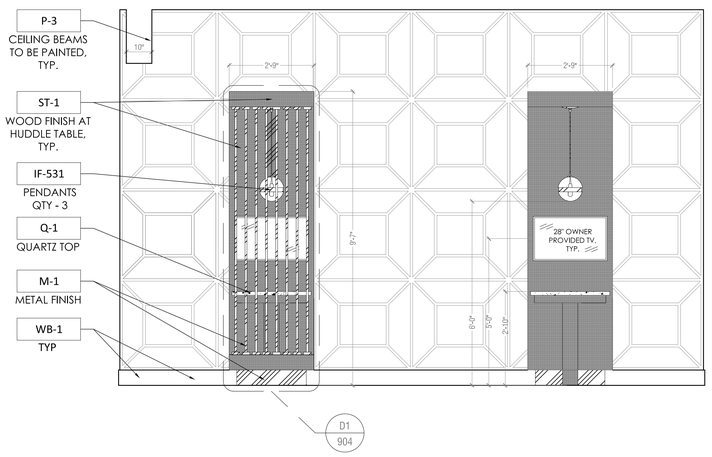

A HUDDLE MILLWORK & FEATURE WALL

SCALE: 3/4" = 1'-0"

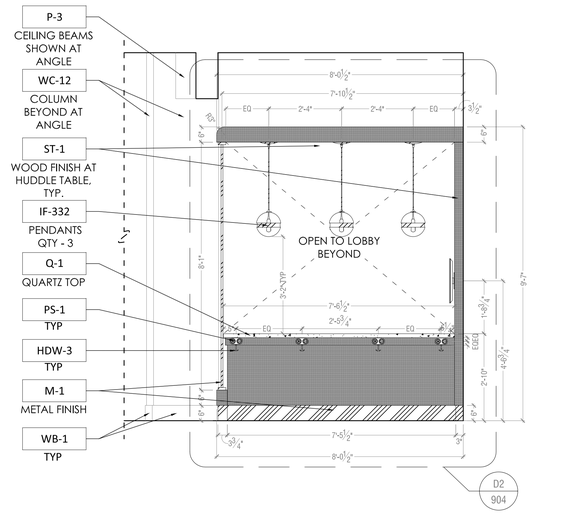

B HUDDLE MILLWORK SIDE VIEW

SCALE: 3/4" = 1'-0"

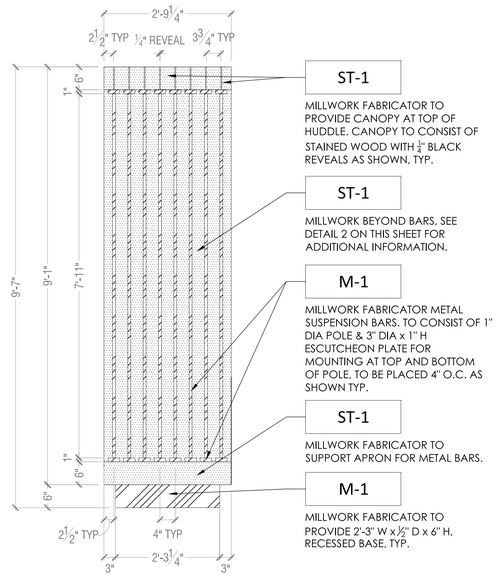

NOTE: QUARTZ TOP BEYOND POLES NOT SHOWN FOR DRAWING CLARITY, SEE S1 FOR QUARTZ TOP, TYP.

D1 HUDDLE FRONT VIEW

SCALE: 3/4" = 1'-0"

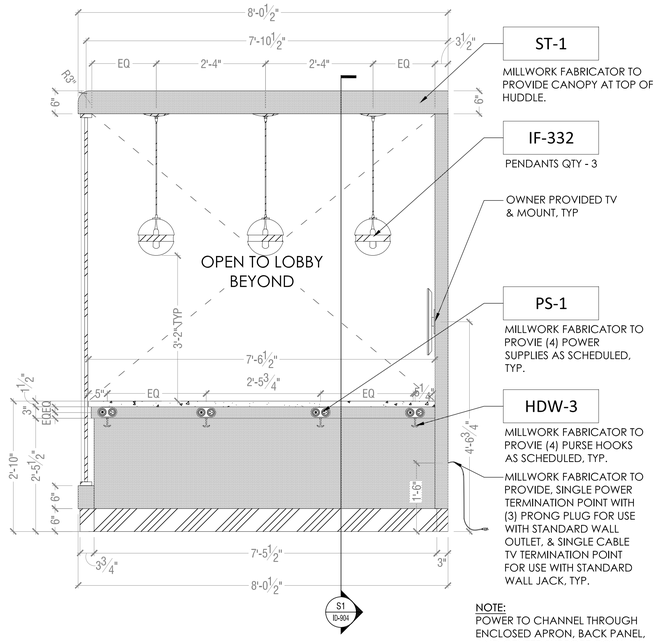

NOTE:
POWER TO CHANNEL THROUGH ENCLOSED APRON, BACK PANEL, AND CENTER SUPPORT COLUMN, TYP.

D2 HUDDLE SIDE VIEW

SCALE: 3/4" = 1'-0"

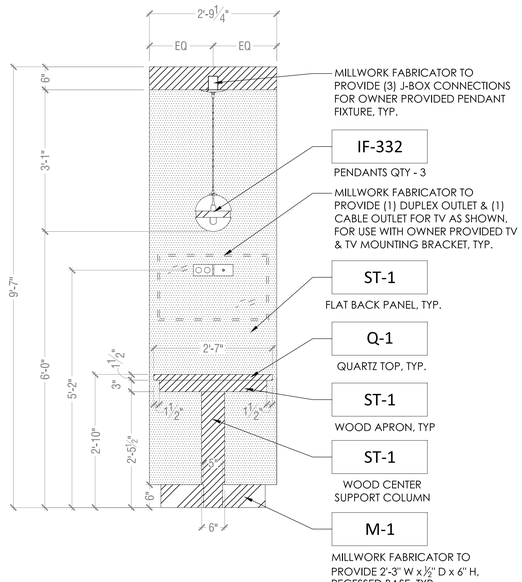

S1 HUDDLE SECTION VIEW

SCALE: 3/4" = 1'-0"

4IA ARCHITECTS
4031 University Drive, Suite 120, Fairfax, VA. 22030
Telephone: (703)352-1933 Fax: (703)691-9171

THIS DRAWING & THE DESIGN SHOWN THEREON ARE THE PROPERTY OF JHA ARCHITECTS. THE REPRODUCTION, COPYING, OR USE OF THIS DRAWING WITH OUT THEIR SPECIFIC WRITTEN CONSENT IS PROHIBITED & ANY INFRINGEMENT WILL BE SUBJECT TO LEGAL ACTION.

DESIGN DIRECTIONS INTERNATIONAL
266 Crescent Circle SW., Marietta, GA 30064
Office: (770)424-8419 | Project Manager Cell: (404)909-2529

THIS DRAWING IS THE PROPERTY OF DESIGN DIRECTIONS INTERNATIONAL AND IS NOT TO BE REPRODUCED OR COPIED WHOLE OR IN PART. IT IS ONLY TO BE USED FOR THE PROJECT AND SITE SPECIFICALLY INTENDED HEREIN, AND IS NOT TO BE USED ON ANY OTHER PROJECT. IT IS TO BE RETURNED UPON REQUEST. SCALES AS STATED HEREON ARE VALID ON THE ORIGINAL DRAWING. THE DIMENSIONS OF WHICH ARE 30" X 42" INCHES.

CLIENT: CHANTILLY HOTEL, LLC.
4335 CHANTILLY SHOPPING CENTER,
CHANTILLY, VA 20151

ISSUES/REVISIONS

NO.	DATE:	REMARKS:
	10/26/2020	BID DOCUMENT SET
1	11/3/2020	BID DOCUMENT SET REVISIONS
2	1/4/2021	DESIGN REVIEW REVISIONS

PROJECT NAME: CROWNE PLAZA® HOTELS & RESORTS
4335 CHANTILLY SHOPPING CENTER
CHANTILLY, VA

DRAWING NAME
HUDDLE MILLWORK DETAILS

SCALE	PROJECT NO.
AS NOTED	1903
DRAWN BY	DATE
KAK & DVE	10.2.2020

DRAWING NO.
ID-904

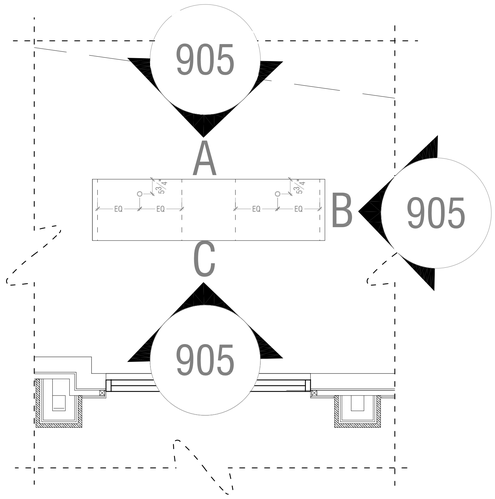

1 BUSINESS AREA FLOOR PLAN

SCALE: 1/2" = 1'-0"

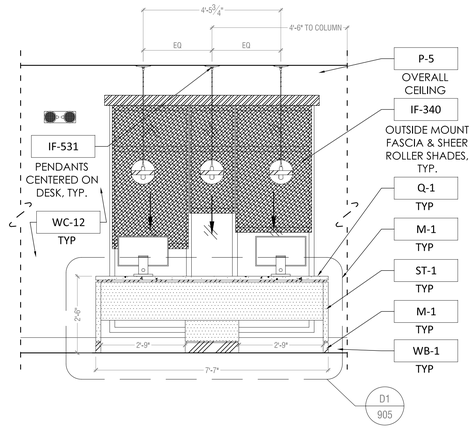

A BUSINESS AREA BACK VIEW

SCALE: 1/2" = 1'-0"

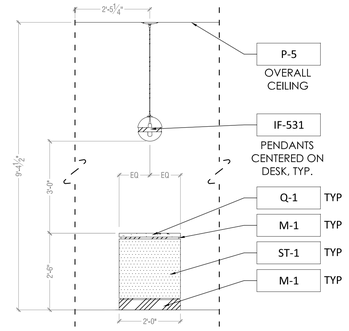

B BUSINESS AREA SIDE VIEW

SCALE: 1/2" = 1'-0"

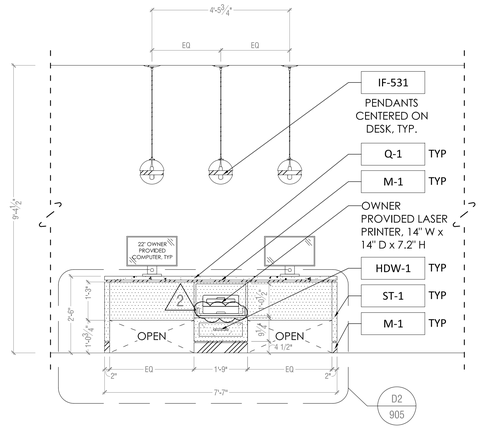

C BUSINESS AREA FRONT VIEW

SCALE: 1/2" = 1'-0"

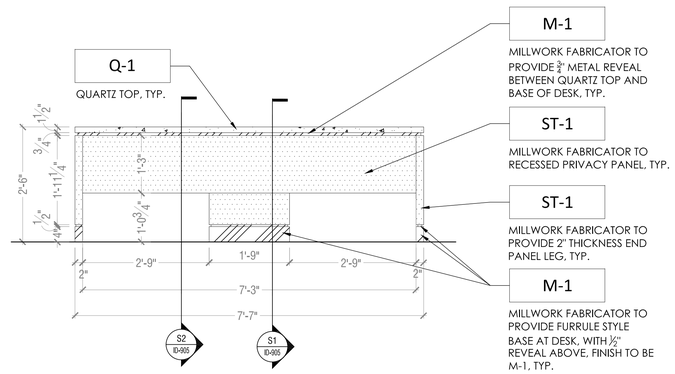

D1 BUSINESS AREA DESK BACK SIDE

SCALE: 3/4" = 1'-0"

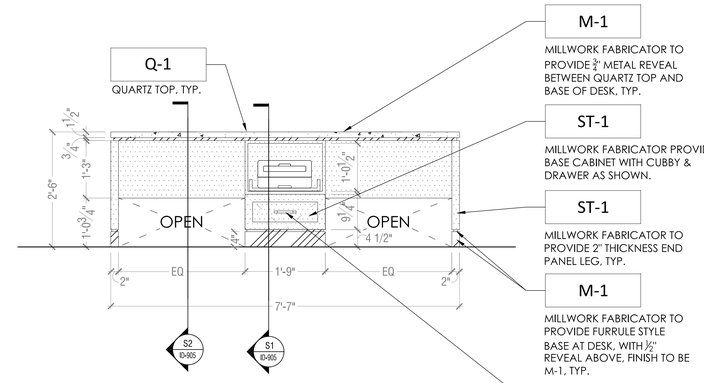

D2 BUSINESS AREA DESK FRONT

SCALE: 3/4" = 1'-0"

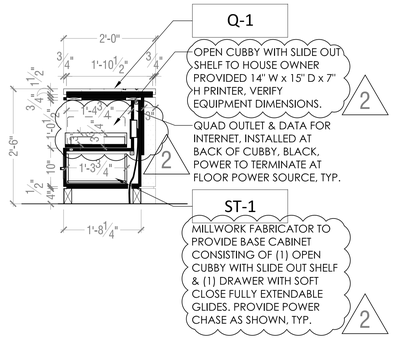

S1 BUSINESS DESK SECTION

SCALE: 3/4" = 1'-0"

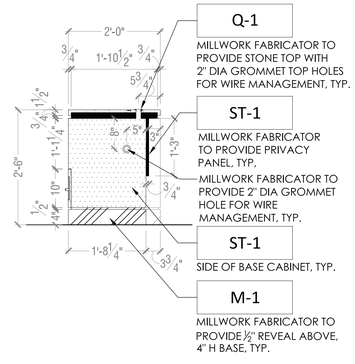

S2 BUSINESS DESK SECTION

SCALE: 3/4" = 1'-0"

4IA ARCHITECTS
4501 University Drive, Suite 130, Fairfax, VA. 22030
Telephone: (703)352-1933 Fax: (703)691-9171

THIS DRAWING & THE DESIGN SHOWN THEREON ARE THE PROPERTY OF 3HA ARCHITECTS. THE REPRODUCTION, COPYING, OR USE OF THIS DRAWING WITH OUT THEIR SPECIFIC WRITTEN CONSENT IS PROHIBITED & ANY INFRINGEMENT WILL BE SUBJECT TO LEGAL ACTION.

DESIGN DIRECTIONS INTERNATIONAL
266 Crescent Circle SW., Marietta, GA 30064
Office: (770)424-8419 | Project Manager Cell: (404)909-2529

THIS DRAWING IS THE PROPERTY OF DESIGN DIRECTIONS INTERNATIONAL AND IS NOT TO BE REPRODUCED OR COPIED WHOLE OR IN PART. IT IS ONLY TO BE USED FOR THE PROJECT AND SITE SPECIFICALLY INTENDED HEREIN, AND IS NOT TO BE USED ON ANY OTHER PROJECT. IT IS TO BE RETURNED UPON REQUEST. SCALES AS STATED HEREON ARE VALID ON THE ORIGINAL DRAWING. THE DIMENSIONS OF WHICH ARE 30" X 42" INCHES.

CLIENT:
CHANTILLY HOTEL, LLC.
4335 CHANTILLY SHOPPING CENTER,
CHANTILLY, VA 20151

ISSUES/REVISIONS

NO.	DATE:	REMARKS:
	10/26/2020	BID DOCUMENT SET
1	11/3/2020	BID DOCUMENT SET REVISIONS
2	1/4/2021	DESIGN REVIEW REVISIONS

PROJECT NAME:
CROWNE PLAZA® HOTELS & RESORTS
4335 CHANTILLY SHOPPING CENTER
CHANTILLY, VA

DRAWING NAME
BUSINESS AREA DETAILS

SCALE	PROJECT NO.
AS NOTED	1903
DRAWN BY	DATE
KAK & DVE	10.2.2020

DRAWING NO.
ID-905

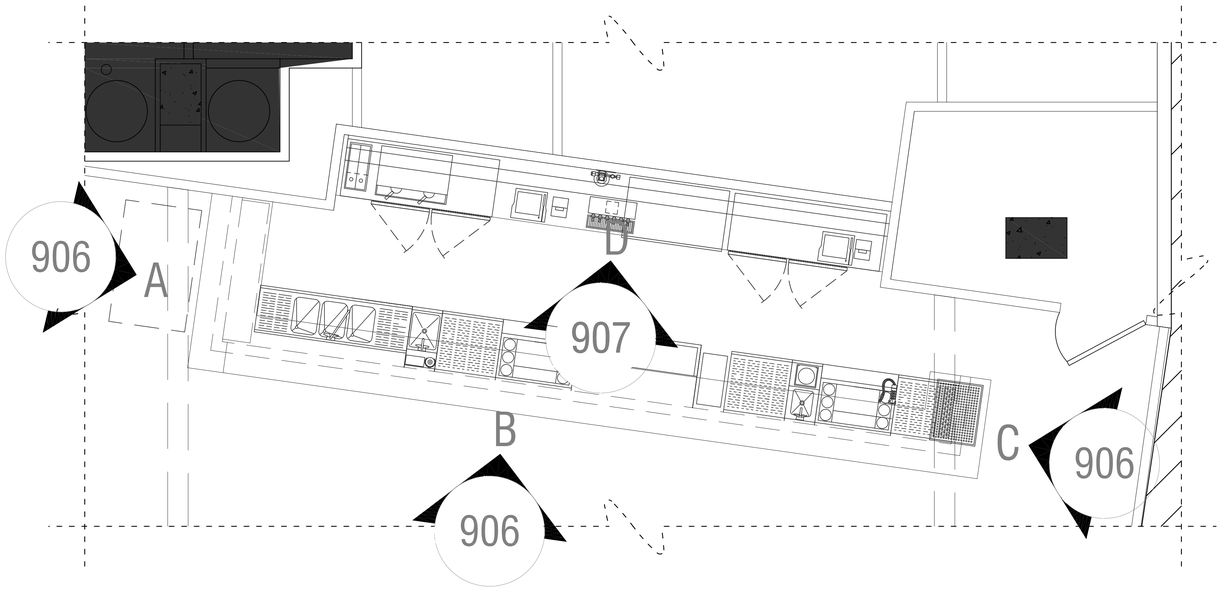

1 RESTAURANT BAR FLOOR PLAN

SCALE: 1/2" = 1'-0"

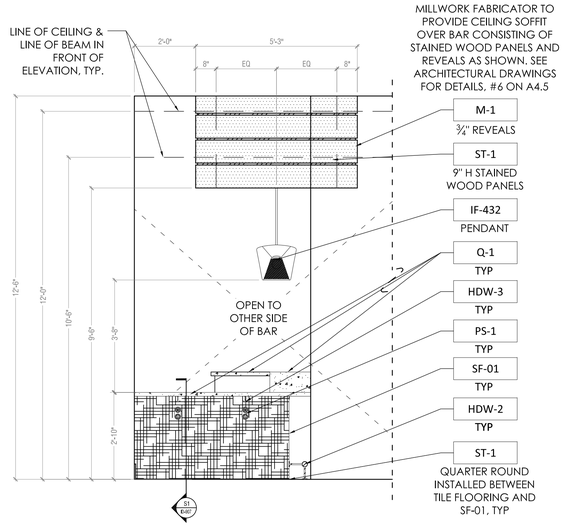

A RESTAURANT BAR - ADA LEFT SIDE

SCALE: 1/2" = 1'-0"

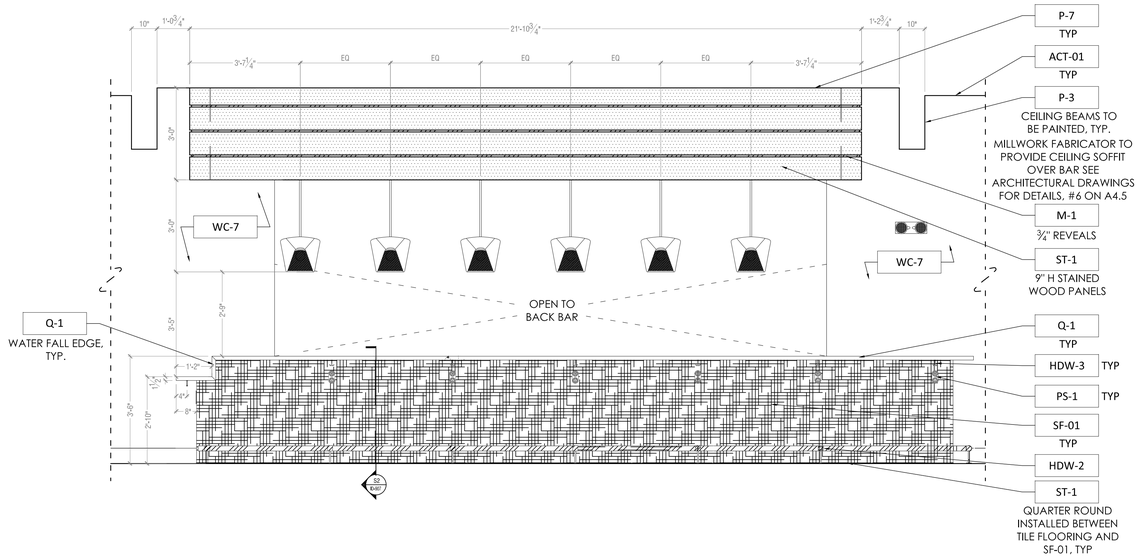

B RESTAURANT BAR - FRONT

SCALE: 1/2" = 1'-0"

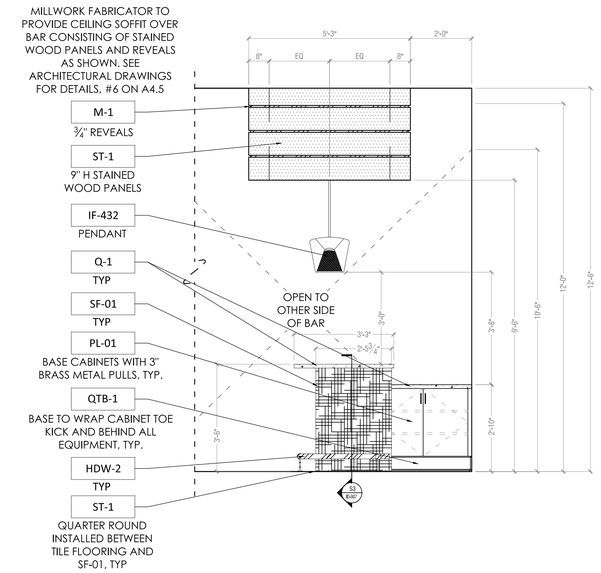

C RESTAURANT BAR - RIGHT ENTRY SIDE

SCALE: 1/2" = 1'-0"

4IA ARCHITECTS
4501 University Drive, Suite 130, Fairfax, VA. 22030
Telephone: (703)352-1933 Fax: (703)691-9171

THIS DRAWING & THE DESIGN SHOWN THEREON ARE THE PROPERTY OF 3HA ARCHITECTS. THE REPRODUCTION, COPYING, OR USE OF THIS DRAWING WITH OUT THEIR SPECIFIC WRITTEN CONSENT IS PROHIBITED & ANY INFRINGEMENT WILL BE SUBJECT TO LEGAL ACTION.

DESIGN DIRECTIONS INTERNATIONAL
266 Crescent Circle SW., Marietta, GA 30064
Office: (770)424-8419 | Project Manager Cell: (404)909-2529

THIS DRAWING IS THE PROPERTY OF DESIGN DIRECTIONS INTERNATIONAL AND IS NOT TO BE REPRODUCED OR COPIED WHOLE OR IN PART. IT IS ONLY TO BE USED FOR THE PROJECT AND SITE SPECIFICALLY INTENDED HEREIN, AND IS NOT TO BE USED ON ANY OTHER PROJECT. IT IS TO BE RETURNED UPON REQUEST. SCALES AS STATED HEREON ARE VALID ON THE ORIGINAL DRAWING. THE DIMENSIONS OF WHICH ARE 30" X 42" INCHES.

CLIENT:
CHANTILLY HOTEL, LLC.
4335 CHANTILLY SHOPPING CENTER,
CHANTILLY, VA 20151

ISSUES/REVISIONS

NO.	DATE:	REMARKS:
	10/26/2020	BID DOCUMENT SET
1	11/3/2020	BID DOCUMENT SET REVISIONS
2	1/4/2021	DESIGN REVIEW REVISIONS

PROJECT NAME:
CROWNE PLAZA® HOTELS & RESORTS
4335 CHANTILLY SHOPPING CENTER
CHANTILLY, VA

DRAWING NAME
RESTAURANT BAR DETAILS

SCALE	PROJECT NO.
AS NOTED	1903
DRAWN BY	DATE
KAK & DVE	10.2.2020

DRAWING NO.
ID-906

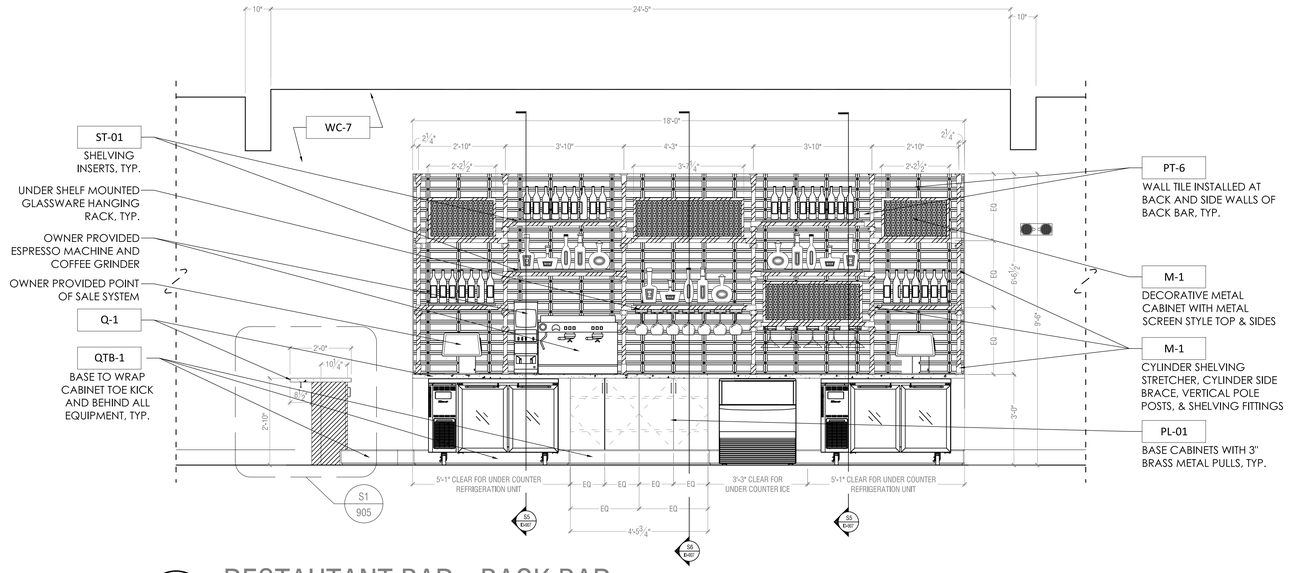

D RESTAUTANT BAR - BACK BAR

SCALE: 1/2" = 1'-0"

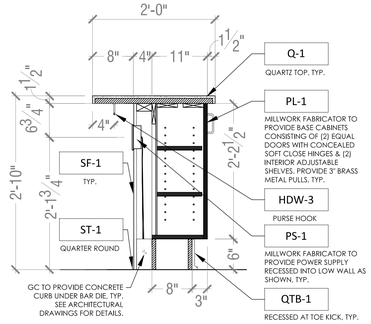

S1 BAR ADA COUNTER

SCALE: 1" = 1'-0"

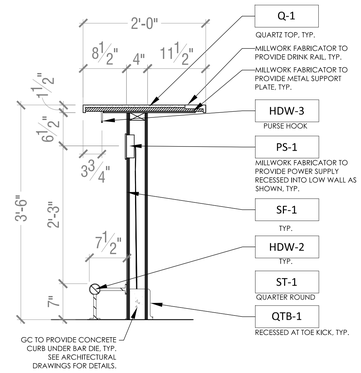

S2 STANDARD BAR SECTION

SCALE: 1" = 1'-0"

BACK BAR METAL SUPPORT INSPIRATION IMAGES:

IMAGES SHOW GLASS SHELVING, ACTUAL MILLWORK TO CONTAIN WOOD SHELVING PER DETAILS & SECTIONS. IMAGES ARE FOR INSPIRATION ONLY. MILLWORK FABRICATOR TO SUBMIT LINE DRAWINGS OF ALL MILLWORK TO INTERIOR DESIGNER FOR REVIEW AND APPROVAL. MILLWORK FABRICATOR TO SUBMIT FINISH SAMPLES OF ALL FINISH MATERIALS TO DESIGNER FOR REVIEW AND APPROVAL.



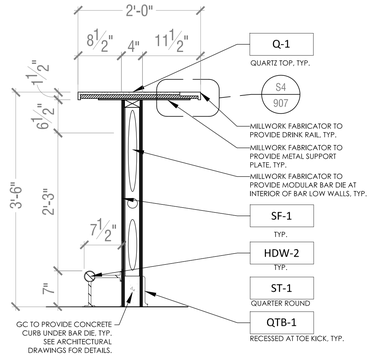

S3 STANDARD BAR SECTION

SCALE: 1" = 1'-0"

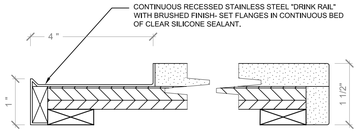

S4 DRINK RAIL SECTION

SCALE: 6" = 1'-0"

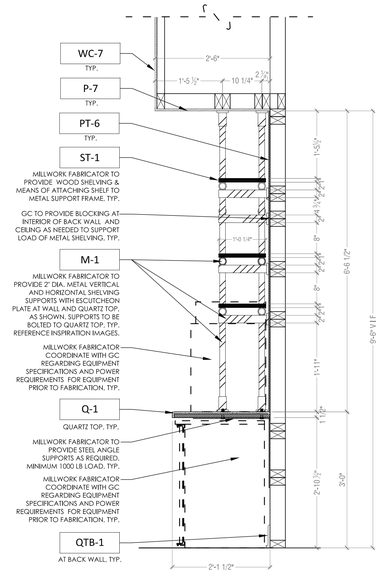

S5 BACK BAR SECTION

SCALE: 3/4" = 1'-0"

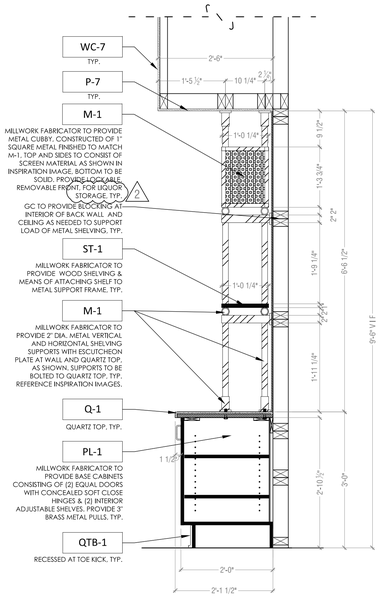

S6 BACK BAR SECTION

SCALE: 3/4" = 1'-0"

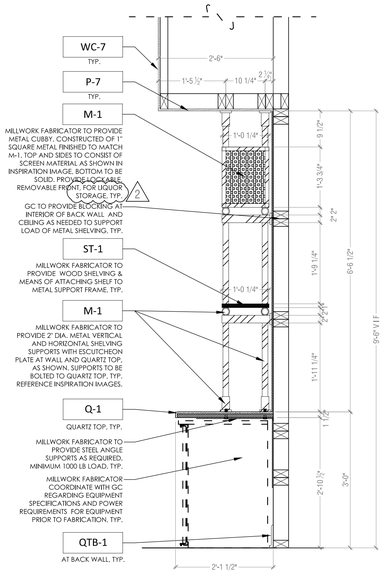

S7 BACK BAR SECTION

SCALE: 3/4" = 1'-0"

4JA ARCHITECTS
4501 University Drive, Suite 130, Fairfax, VA. 22030
Telephone: (703)352-1933 Fax: (703)691-9171

THIS DRAWING & THE DESIGN SHOWN THEREON ARE THE PROPERTY OF 3HA ARCHITECTS. THE REPRODUCTION, COPYING, OR USE OF THIS DRAWING WITH OUT THEIR SPECIFIC WRITTEN CONSENT IS PROHIBITED & ANY INFRINGEMENT WILL BE SUBJECT TO LEGAL ACTION.

DESIGN DIRECTIONS INTERNATIONAL
266 Crescent Circle SW., Marietta, GA 30064
Office: (770)424-8419 | Project Manager Cell: (404)909-2529

THIS DRAWING IS THE PROPERTY OF DESIGN DIRECTIONS INTERNATIONAL AND IS NOT TO BE REPRODUCED OR COPIED WHOLE OR IN PART. IT IS ONLY TO BE USED FOR THE PROJECT AND SITE SPECIFICALLY INTENDED HEREIN, AND IS NOT TO BE USED ON ANY OTHER PROJECT. IT IS TO BE RETURNED UPON REQUEST. SCALES AS STATED HEREON ARE VALID ON THE ORIGINAL DRAWING. THE DIMENSIONS OF WHICH ARE 30" X 42" INCHES.

CLIENT:
CHANTILLY HOTEL, LLC.
4335 CHANTILLY SHOPPING CENTER,
CHANTILLY, VA 20151

ISSUES/REVISIONS

NO.	DATE:	REMARKS:
	10/26/2020	BID DOCUMENT SET
1	1/3/2020	BID DOCUMENT SET REVISIONS
2	1/4/2021	DESIGN REVIEW REVISIONS

PROJECT NAME:
CROWNE PLAZA® HOTELS & RESORTS
4335 CHANTILLY SHOPPING CENTER
CHANTILLY, VA

DRAWING NAME
RESTAURANT BAR DETAILS

SCALE	PROJECT NO.
AS NOTED	1903
DRAWN BY	DATE
KAK & DVE	10.2.2020

DRAWING NO.
ID-907

REMOVED FROM PROJECT DUE TO TV RELOCATION

JHA ARCHITECTS
4501 University Drive, Suite 120, Fairfax, VA. 22030
Telephone: (703)352-1933 Fax: (703)691-9171

THIS DRAWING & THE DESIGN SHOWN THEREON ARE THE PROPERTY OF JHA ARCHITECTS. THE REPRODUCTION, COPYING, OR USE OF THIS DRAWING WITH OUT THEIR SPECIFIC WRITTEN CONSENT IS PROHIBITED & ANY INFRINGEMENT WILL BE SUBJECT TO LEGAL ACTION.

DESIGN DIRECTIONS INTERNATIONAL
266 Crescent Circle SW., Marietta, GA 30064
Office: (770)424-8419 | Project Manager Cell: (404)909-2529

THIS DRAWING IS THE PROPERTY OF DESIGN DIRECTIONS INTERNATIONAL AND IS NOT TO BE REPRODUCED OR COPIED WHOLE OR IN PART. IT IS ONLY TO BE USED FOR THE PROJECT AND SITE SPECIFICALLY INTENDED HEREIN, AND IS NOT TO BE USED ON ANY OTHER PROJECT. IT IS TO BE RETURNED UPON REQUEST. SCALES AS STATED HEREON ARE VALID ON THE ORIGINAL DRAWING, THE DIMENSIONS OF WHICH ARE 30" X 42" INCHES.

CLIENT:
CHANTILLY HOTEL, LLC.
4335 CHANTILLY SHOPPING CENTER,
CHANTILLY, VA 20151

ISSUES/REVISIONS

NO.	DATE:	REMARKS:
	10/26/2020	BID DOCUMENT SET
1	11/3/2020	BID DOCUMENT SET REVISIONS
2	1/4/2021	DESIGN REVIEW REVISIONS

PROJECT NAME:
CROWNE PLAZA HOTELS & RESORTS
4335 CHANTILLY SHOPPING CENTER
CHANTILLY, VA

DRAWING NAME
RESTAURANT BAR TV WALL MILLWORK DETAILS

SCALE	PROJECT NO.
AS NOTED	1903
DRAWN BY	DATE
KAK & DVE	10.2.2020

DRAWING NO.
ID-908

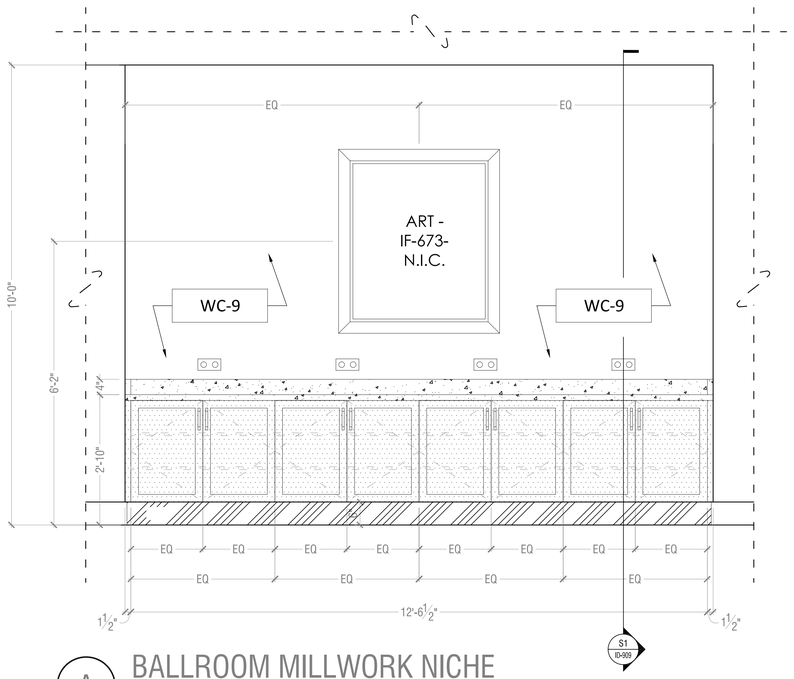

A BALLROOM MILLWORK NICHE

SCALE: 3/4" = 1'-0"

NOTE: SEE ELEVATION B FOR TYPICAL NOTES.

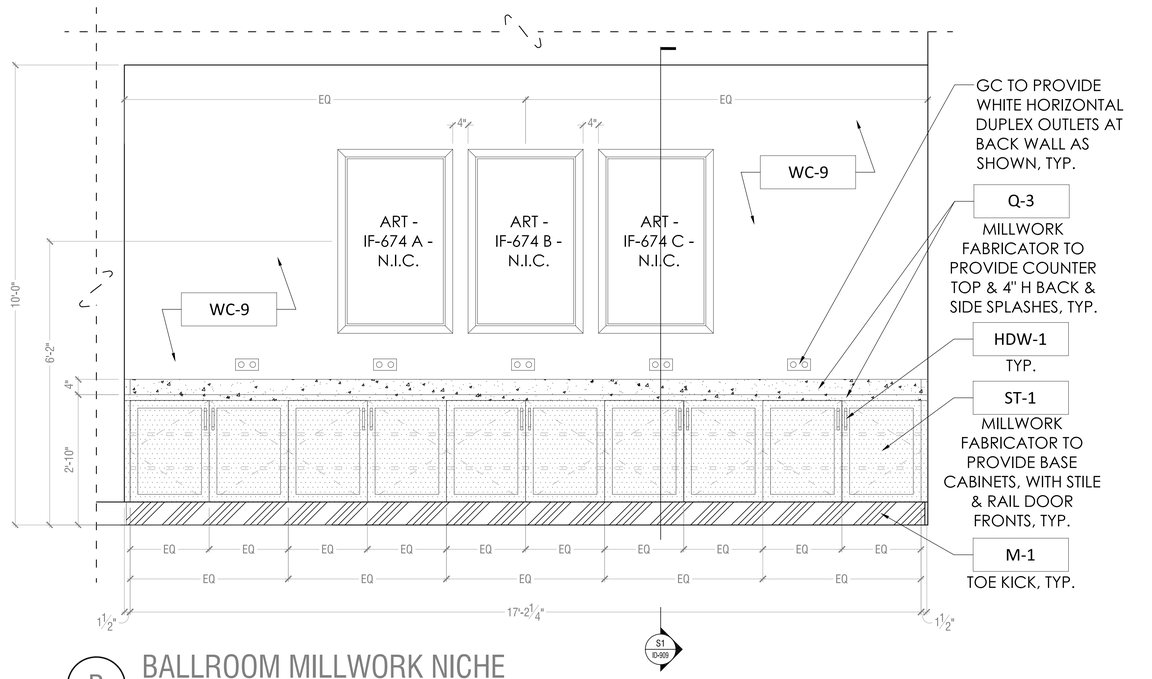

B BALLROOM MILLWORK NICHE

SCALE: 3/4" = 1'-0"

CONSTRUCTION NOTES:

1. ALL CABINETS AND DRAWERS TO HAVE SAME KEYED LOCKS
2. INTERIOR CABINETS TO BE BLACK MELAMINE
3. DRAWER CONSTRUCTION -SIDES OF BOX ARE FRENCH DOVETAILED INTO FRONT, BACK IS THROUGH DADOED INTO SIDES, DRAWER BOTTOM IS MELAMINE, SIDES WOOD
4. ALL DRAWER AND SHELF GLIDES TO BE FULL EXTENSION SOFT CLOSE UNITS - KV8450 OR EQUAL
5. MILLWORK MANUFACTURER TO VERIFY ALL EQUIPMENT SIZES BEFORE BEGINNING
6. ALL EQUIPMENT TO BE SUPPLIED BY OWNER THROUGH IHG PREFERRED VENDOR.

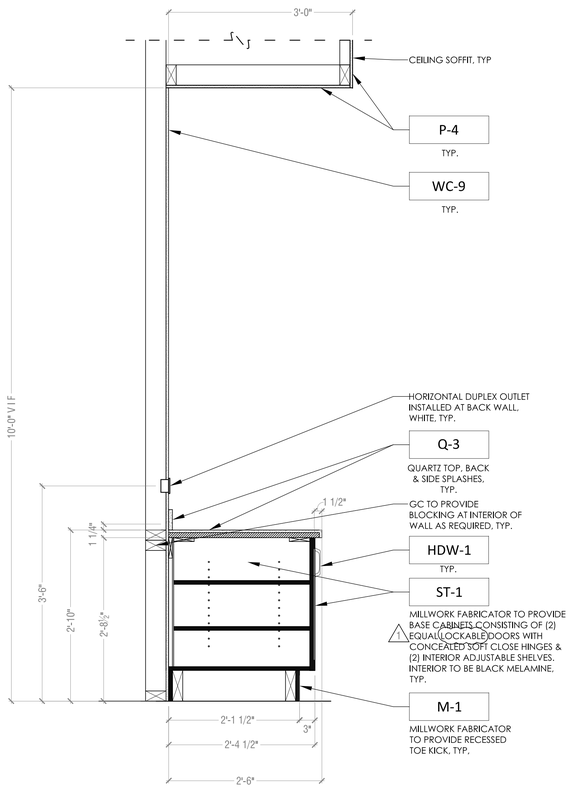

S1 CABINET MILLWORK SECTION

SCALE: 1" = 1'-0"

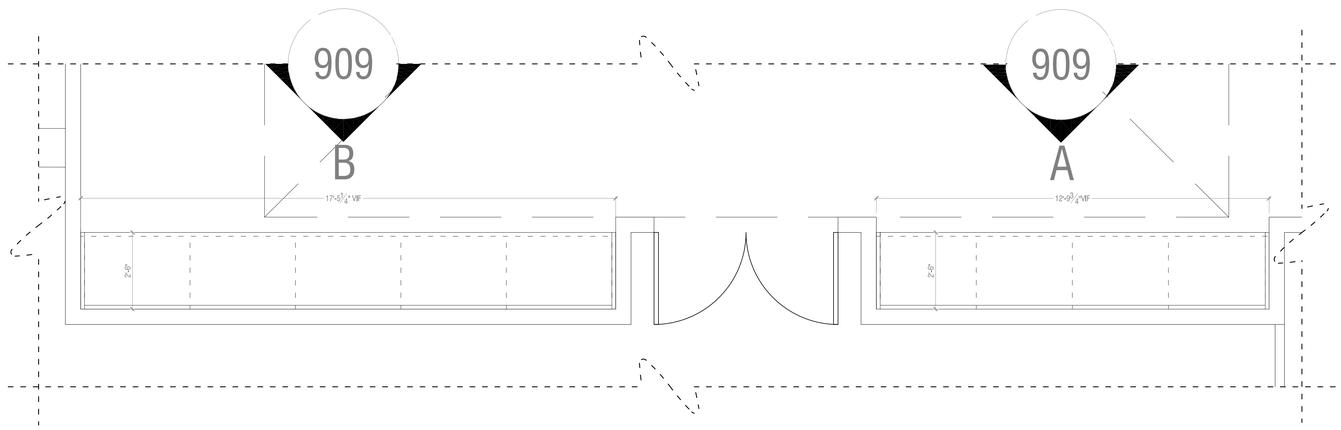

1 BALLROOM MILLWORK AT ENTRY NICHE FLOOR PLAN

SCALE: 1/2" = 1'-0"

4IA ARCHITECTS
4031 University Drive, Suite 120, Fairfax, VA. 22030
Telephone: (703)352-1933 Fax: (703)691-9171

THIS DRAWING & THE DESIGN SHOWN THEREON ARE THE PROPERTY OF 3HA ARCHITECTS. THE REPRODUCTION, COPYING, OR USE OF THIS DRAWING WITH OUT THEIR SPECIFIC WRITTEN CONSENT IS PROHIBITED & ANY INFRINGEMENT WILL BE SUBJECT TO LEGAL ACTION.

DESIGN DIRECTIONS INTERNATIONAL
266 Crescent Circle SW., Marietta, GA 30064
Office: (770)424-8419 | Project Manager Cell: (404)909-2529

THIS DRAWING IS THE PROPERTY OF DESIGN DIRECTIONS INTERNATIONAL AND IS NOT TO BE REPRODUCED OR COPIED WHOLE OR IN PART. IT IS ONLY TO BE USED FOR THE PROJECT AND SITE SPECIFICALLY INTENDED HEREIN, AND IS NOT TO BE USED ON ANY OTHER PROJECT. IT IS TO BE RETURNED UPON REQUEST. SCALES AS STATED HEREON ARE VALID ON THE ORIGINAL DRAWING. THE DIMENSIONS OF WHICH ARE 30" X 42" INCHES.

CLIENT:
CHANTILLY HOTEL, LLC.
4335 CHANTILLY SHOPPING CENTER,
CHANTILLY, VA 20151

ISSUES/REVISIONS

NO.	DATE:	REMARKS:
	10/26/2020	BID DOCUMENT SET
1	11/3/2020	BID DOCUMENT SET REVISIONS
2	1/14/2021	DESIGN REVIEW REVISIONS

PROJECT NAME:
CROWNE PLAZA® HOTELS & RESORTS
4335 CHANTILLY SHOPPING CENTER
CHANTILLY, VA

DRAWING NAME
BALLROOM CABINETRY DETAILS

SCALE	PROJECT NO.
AS NOTED	1903
DRAWN BY	DATE
KAK & DVE	10.2.2020

DRAWING NO.
ID-909

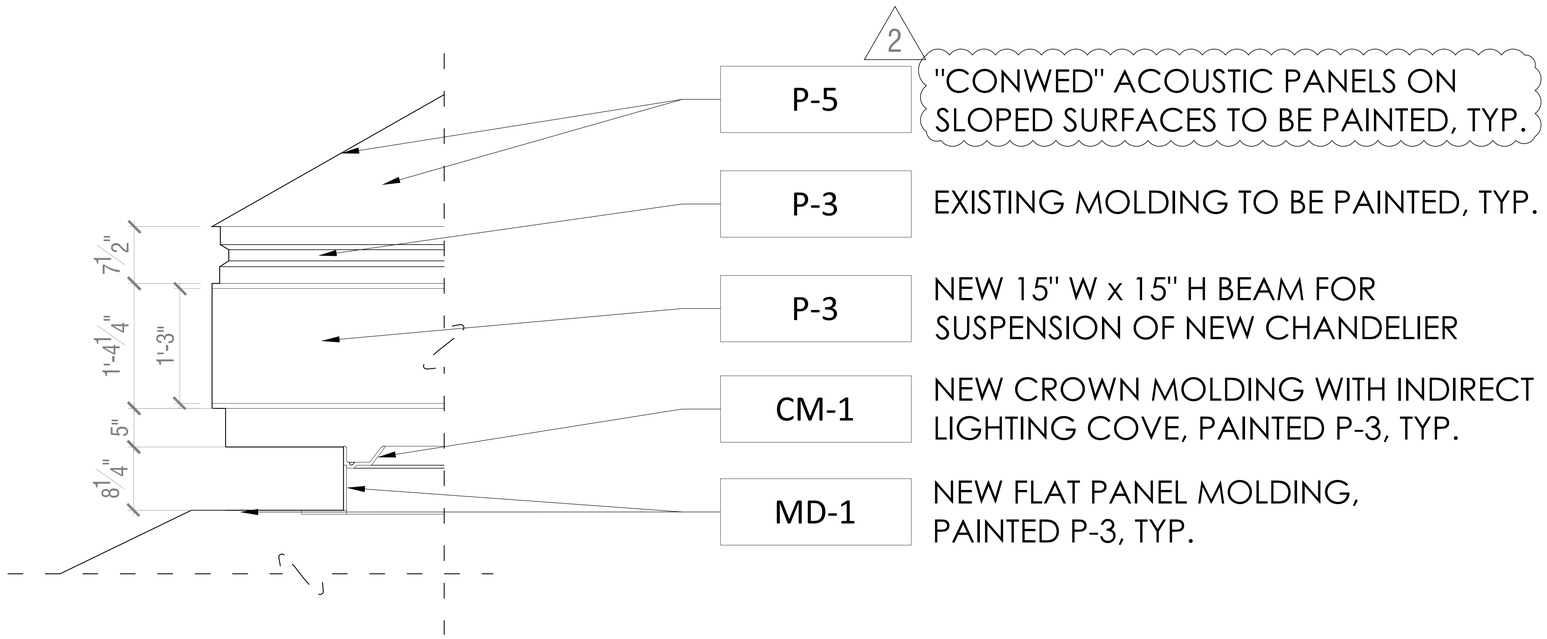

2

"CONWED" ACOUSTIC PANELS ON SLOPED SURFACES TO BE PAINTED, TYP.

EXISTING MOLDING TO BE PAINTED, TYP.

NEW 15" W x 15" H BEAM FOR SUSPENSION OF NEW CHANDELIER

NEW CROWN MOLDING WITH INDIRECT LIGHTING COVE, PAINTED P-3, TYP.

NEW FLAT PANEL MOLDING, PAINTED P-3, TYP.

1 BALLROOM CUPOLA CEILING MOULDING DETAIL

SCALE: 1 1/2" = 1'-0"

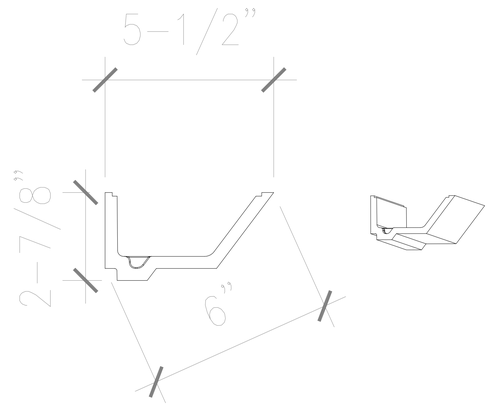

1 CM-1 - CROWNE MOULDING

SCALE: 6" = 1'-0"

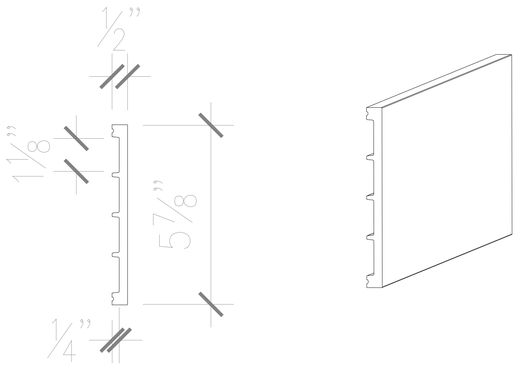

2 MD-1 - MOULDING

SCALE: 6" = 1'-0"

JHA ARCHITECTS
4031 University Drive, Suite 120, Fairfax, VA. 22030
Telephone: (703)352-1933 Fax: (703)691-9171

THIS DRAWING & THE DESIGN SHOWN THEREON ARE THE PROPERTY OF JHA ARCHITECTS. THE REPRODUCTION, COPYING, OR USE OF THIS DRAWING WITH OUT THEIR SPECIFIC WRITTEN CONSENT IS PROHIBITED & ANY INFRINGEMENT WILL BE SUBJECT TO LEGAL ACTION.

DESIGN DIRECTIONS INTERNATIONAL
266 Crescent Circle SW., Marietta, GA 30064
Office: (770)424-8419 | Project Manager Cell: (404)909-2529

THIS DRAWING IS THE PROPERTY OF DESIGN DIRECTIONS INTERNATIONAL AND IS NOT TO BE REPRODUCED OR COPIED WHOLE OR IN PART. IT IS ONLY TO BE USED FOR THE PROJECT AND SITE SPECIFICALLY INTENDED HEREIN, AND IS NOT TO BE USED ON ANY OTHER PROJECT. IT IS TO BE RETURNED UPON REQUEST. SCALES AS STATED HEREON ARE VALID ON THE ORIGINAL DRAWING. THE DIMENSIONS OF WHICH ARE 30" X 42" INCHES.

CLIENT:
CHANTILLY HOTEL, LLC.
4335 CHANTILLY SHOPPING CENTER,
CHANTILLY, VA 20151

ISSUES/REVISIONS

NO.	DATE:	REMARKS:
	10/26/2020	BID DOCUMENT SET
1	11/3/2020	BID DOCUMENT SET REVISIONS
2	1/4/2021	DESIGN REVIEW REVISIONS

PROJECT NAME:
CROWNE PLAZA® HOTELS & RESORTS
4335 CHANTILLY SHOPPING CENTER
CHANTILLY, VA

DRAWING NAME
BALLROOM CEILING DETAILS

SCALE	PROJECT NO.
AS NOTED	1903
DRAWN BY	DATE
KAK & DVE	10.2.2020

DRAWING NO.
ID-910

REMOVED FROM PROJECT PER CLIENT DIRECTION

JHA ARCHITECTS
4531 University Drive, Suite 130, Fairfax, VA. 22030
Telephone: (703)352-1933 Fax: (703)691-9171

THIS DRAWING & THE DESIGN SHOWN THEREON ARE THE PROPERTY OF JHA ARCHITECTS. THE REPRODUCTION, COPYING, OR USE OF THIS DRAWING WITH OUT THEIR SPECIFIC WRITTEN CONSENT IS PROHIBITED & ANY INFRINGEMENT WILL BE SUBJECT TO LEGAL ACTION.

DESIGN DIRECTIONS INTERNATIONAL
266 Crescent Circle SW., Marietta, GA 30064
Office: (770)424-8419 | Project Manager Cell: (404)909-2529

THIS DRAWING IS THE PROPERTY OF DESIGN DIRECTIONS INTERNATIONAL AND IS NOT TO BE REPRODUCED OR COPIED WHOLE OR IN PART. IT IS ONLY TO BE USED FOR THE PROJECT AND SITE SPECIFICALLY INTENDED HEREIN, AND IS NOT TO BE USED ON ANY OTHER PROJECT. IT IS TO BE RETURNED UPON REQUEST. SCALES AS STATED HEREON ARE VALID ON THE ORIGINAL DRAWING, THE DIMENSIONS OF WHICH ARE 30" X 42" INCHES.

CLIENT:
CHANTILLY HOTEL, LLC.
4335 CHANTILLY SHOPPING CENTER,
CHANTILLY, VA 20151

ISSUES/REVISIONS

NO.	DATE:	REMARKS:
	10/26/2020	BID DOCUMENT SET
1	11/3/2020	BID DOCUMENT SET REVISIONS
2	1/4/2021	DESIGN REVIEW REVISIONS

PROJECT NAME:
CROWNE PLAZA® HOTELS & RESORTS
4335 CHANTILLY SHOPPING CENTER
CHANTILLY, VA

DRAWING NAME
BALLROOM TV WALL & COLUMN DETAILS

SCALE	PROJECT NO.
AS NOTED	1903
DRAWN BY	DATE
KAK & DVE	10.2.2020

DRAWING NO.
ID-911

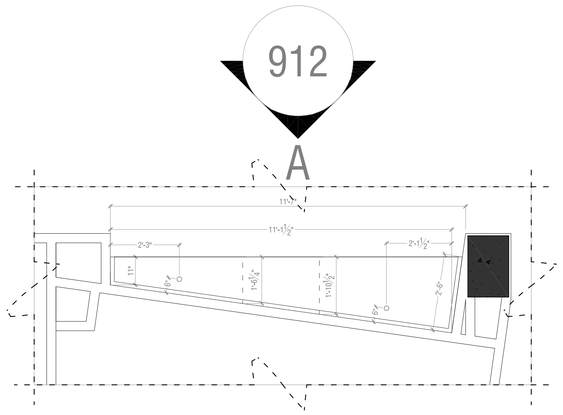

1 PRE-FUNCTION BOARDING PASS STATION

SCALE: 1/2" = 1'-0"

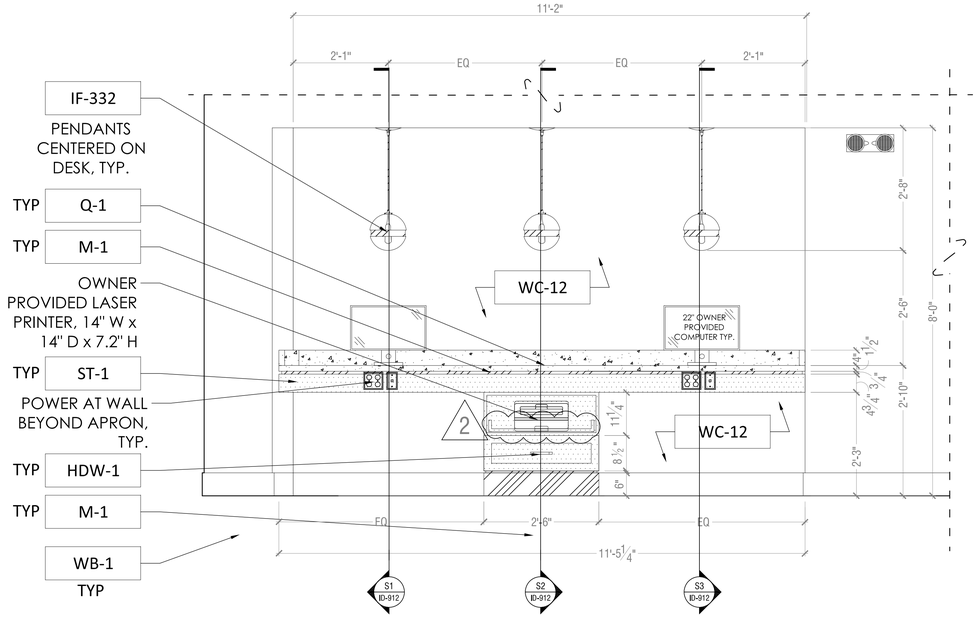

A PRE-FUNCTION BOARDING PASS STATION

SCALE: 3/4" = 1'-0"

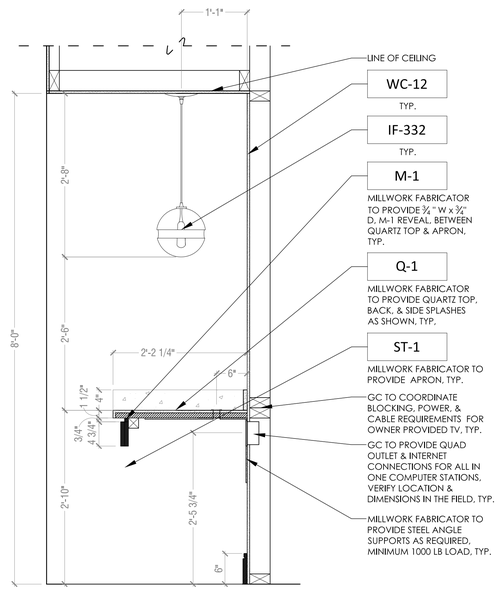

S1 BOARDING PASS STATION SECTION

SCALE: 1" = 1'-0"

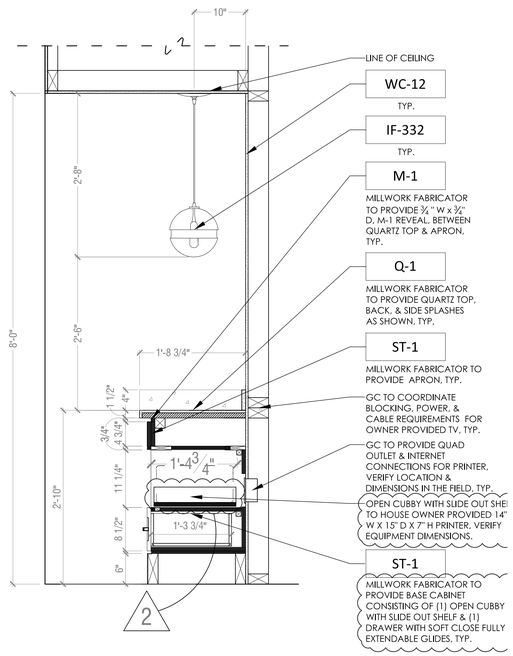

S2 BOARDING PASS STATION SECTION

SCALE: 1" = 1'-0"

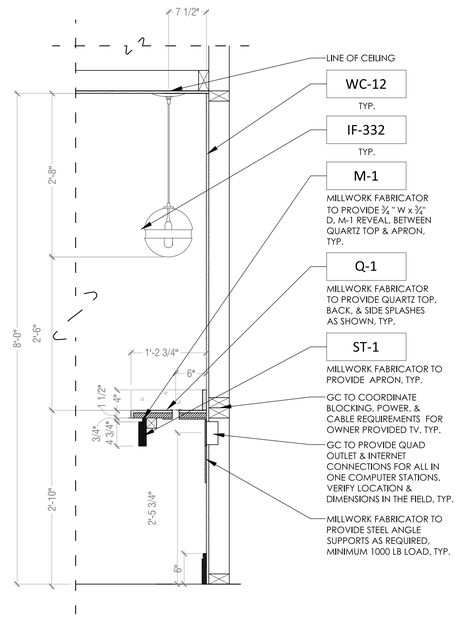

S3 BOARDING PASS STATION SECTION

SCALE: 1" = 1'-0"

4JA ARCHITECTS
4531 University Drive, Suite 130, Fairfax, VA. 22030
Telephone: (703)352-1933 Fax: (703)691-9171

THIS DRAWING & THE DESIGN SHOWN THEREON ARE THE PROPERTY OF JHA ARCHITECTS. THE REPRODUCTION, COPYING, OR USE OF THIS DRAWING WITH OUT THEIR SPECIFIC WRITTEN CONSENT IS PROHIBITED & ANY INFRINGEMENT WILL BE SUBJECT TO LEGAL ACTION.

DESIGN DIRECTIONS INTERNATIONAL
266 Crescent Circle SW., Marietta, GA 30064
Office: (770)424-8419 | Project Manager Cell: (404)909-2529

THIS DRAWING IS THE PROPERTY OF DESIGN DIRECTIONS INTERNATIONAL AND IS NOT TO BE REPRODUCED OR COPIED WHOLE OR IN PART. IT IS ONLY TO BE USED FOR THE PROJECT AND SITE SPECIFICALLY INTENDED HEREIN, AND IS NOT TO BE USED ON ANY OTHER PROJECT. IT IS TO BE RETURNED UPON REQUEST. SCALES AS STATED HEREON ARE VALID ON THE ORIGINAL DRAWING. THE DIMENSIONS OF WHICH ARE 30" X 42" INCHES.

CLIENT:
CHANTILLY HOTEL, LLC.
4335 CHANTILLY SHOPPING CENTER,
CHANTILLY, VA 20151

ISSUES/REVISIONS

NO.	DATE:	REMARKS:
	10/26/2020	BID DOCUMENT SET
1	11/3/2020	BID DOCUMENT SET REVISIONS
2	1/4/2021	DESIGN REVIEW REVISIONS

PROJECT NAME:
CROWNE PLAZA® HOTELS & RESORTS
4335 CHANTILLY SHOPPING CENTER
CHANTILLY, VA

DRAWING NAME
PREFUNCTION BOARDING PASS STATION

SCALE	PROJECT NO.
AS NOTED	1903
DRAWN BY	DATE
KAK & DVE	10.2.2020

DRAWING NO.
ID-912

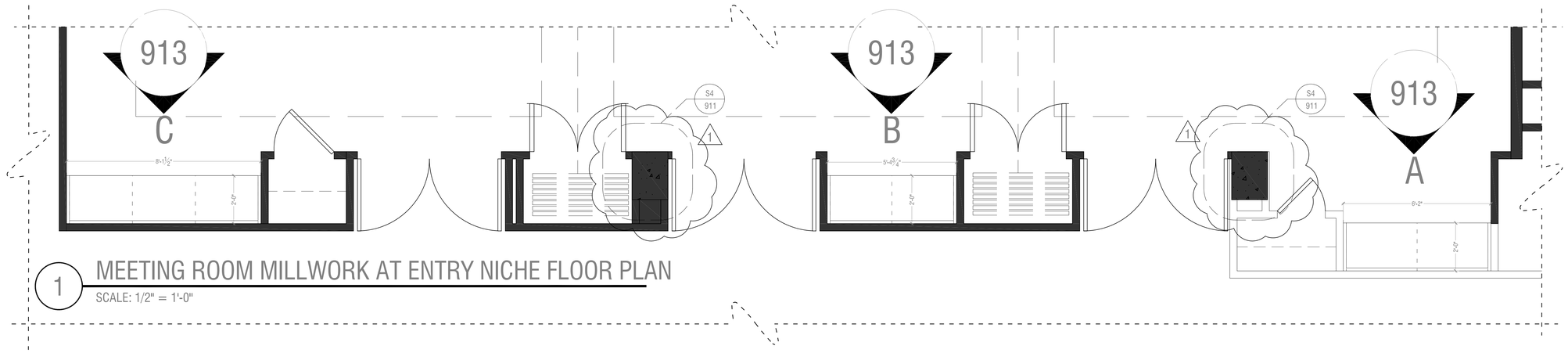

1 MEETING ROOM MILLWORK AT ENTRY NICHE FLOOR PLAN

SCALE: 1/2" = 1'-0"

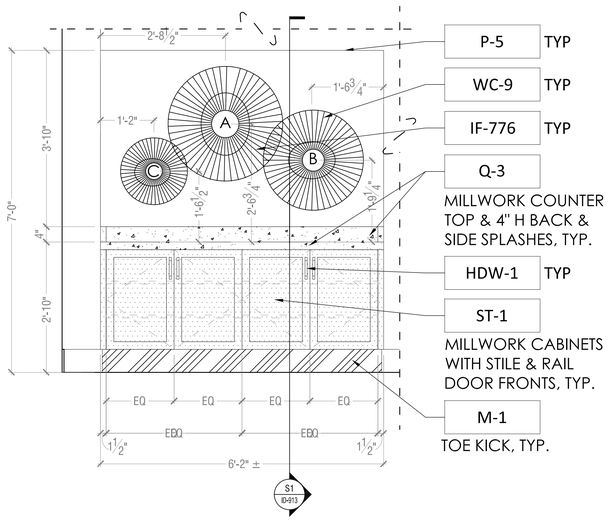

P-5 TYP
WC-9 TYP
IF-776 TYP
Q-3
MILLWORK COUNTER TOP & 4" H BACK & SIDE SPLASHES, TYP.
HDW-1 TYP
ST-1
MILLWORK CABINETS WITH STILE & RAIL DOOR FRONTS, TYP.
M-1
TOE KICK, TYP.

A MEETING ROOM MILLWORK NICHE

SCALE: 3/4" = 1'-0"

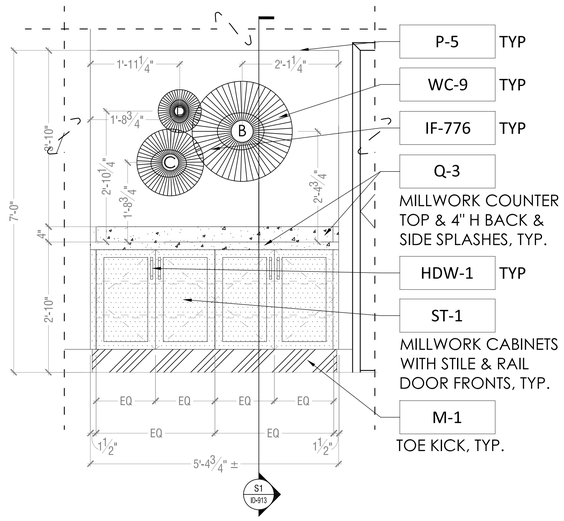

P-5 TYP
WC-9 TYP
IF-776 TYP
Q-3
MILLWORK COUNTER TOP & 4" H BACK & SIDE SPLASHES, TYP.
HDW-1 TYP
ST-1
MILLWORK CABINETS WITH STILE & RAIL DOOR FRONTS, TYP.
M-1
TOE KICK, TYP.

B MEETING ROOM MILLWORK NICHE

SCALE: 3/4" = 1'-0"

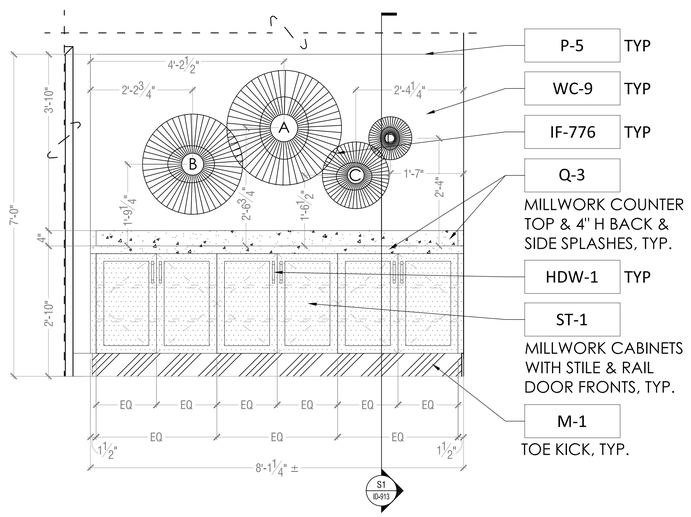

P-5 TYP
WC-9 TYP
IF-776 TYP
Q-3
MILLWORK COUNTER TOP & 4" H BACK & SIDE SPLASHES, TYP.
HDW-1 TYP
ST-1
MILLWORK CABINETS WITH STILE & RAIL DOOR FRONTS, TYP.
M-1
TOE KICK, TYP.

C MEETING ROOM MILLWORK NICHE

SCALE: 3/4" = 1'-0"

CONSTRUCTION NOTES:

1. ALL CABINETS AND DRAWERS TO HAVE SAME KEYED LOCKS
2. INTERIOR CABINETS TO BE BLACK MELAMINE
3. DRAWER CONSTRUCTION -SIDES OF BOX ARE FRENCH DOVETAILED INTO FRONT, BACK IS THROUGH DADOED INTO SIDES, DRAWER BOTTOM IS MELAMINE, SIDES WOOD
4. ALL DRAWER AND SHELF GLIDES TO BE FULL EXTENSION SOFT CLOSE UNITS - KV8450 OR EQUAL
5. MILLWORK MANUFACTURER TO VERIFY ALL EQUIPMENT SIZES BEFORE BEGINNING
6. ALL EQUIPMENT TO BE SUPPLIED BY OWNER THROUGH IHG PREFERRED VENDOR.

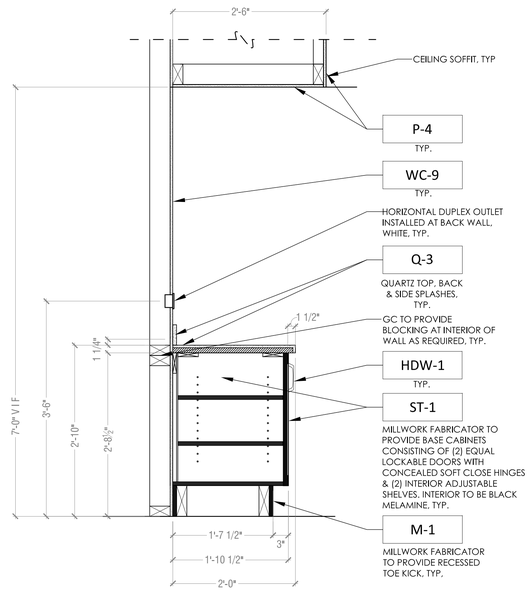

S1 CABINET MILLWORK SECTION

SCALE: 1" = 1'-0"

4IA ARCHITECTS
4501 University Drive, Suite 130, Fairfax, VA. 22030
Telephone: (703)352-1933 Fax: (703)691-9171

THIS DRAWING & THE DESIGN SHOWN THEREON ARE THE PROPERTY OF 2HA ARCHITECTS. THE REPRODUCTION, COPYING, OR USE OF THIS DRAWING WITH OUT THEIR SPECIFIC WRITTEN CONSENT IS PROHIBITED & ANY INFRINGEMENT WILL BE SUBJECT TO LEGAL ACTION.

DESIGN DIRECTIONS INTERNATIONAL
266 Crescent Circle SW., Marietta, GA 30064
Office: (770)424-8419 | Project Manager Cell: (404)909-2529

THIS DRAWING IS THE PROPERTY OF DESIGN DIRECTIONS INTERNATIONAL AND IS NOT TO BE REPRODUCED OR COPIED WHOLE OR IN PART. IT IS ONLY TO BE USED FOR THE PROJECT AND SITE SPECIFICALLY INTENDED HEREIN, AND IS NOT TO BE USED ON ANY OTHER PROJECT. IT IS TO BE RETURNED UPON REQUEST. SCALES AS STATED HEREON ARE VALID ON THE ORIGINAL DRAWING. THE DIMENSIONS OF WHICH ARE 30" X 42" INCHES.

CLIENT:
CHANTILLY HOTEL, LLC.
4335 CHANTILLY SHOPPING CENTER,
CHANTILLY, VA 20151

ISSUES/REVISIONS

NO.	DATE:	REMARKS:
	10/26/2020	BID DOCUMENT SET
1	11/3/2020	BID DOCUMENT SET REVISIONS
2	1/4/2021	DESIGN REVIEW REVISIONS

PROJECT NAME:
CROWNE PLAZA® HOTELS & RESORTS
4335 CHANTILLY SHOPPING CENTER
CHANTILLY, VA

DRAWING NAME
MEETING ROOM CABINETRY DETAILS

SCALE	PROJECT NO.
AS NOTED	1903
DRAWN BY	DATE
KAK & DVE	10.2.2020

DRAWING NO.
ID-913

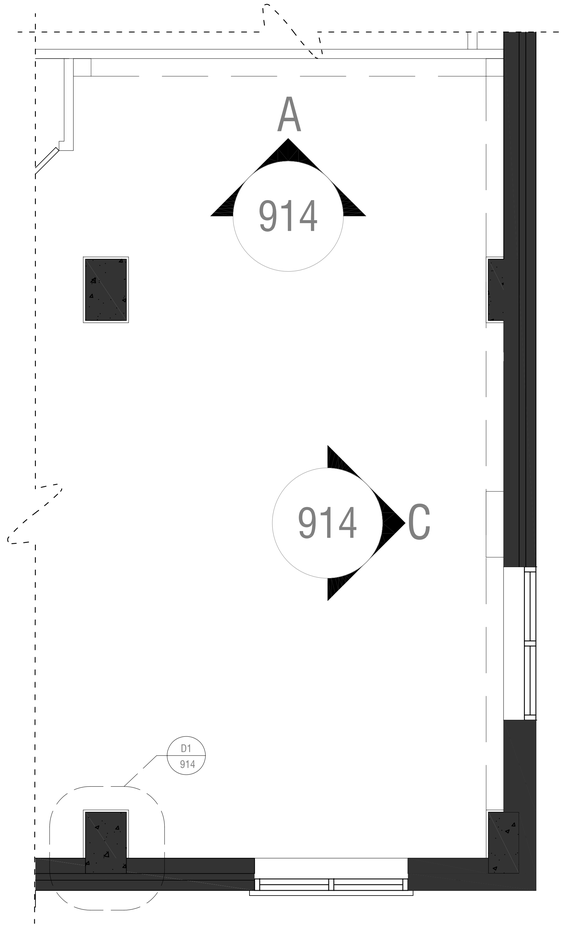

1 FITNESS MILLWORK FLOOR PLAN

SCALE: 1/2" = 1'-0"

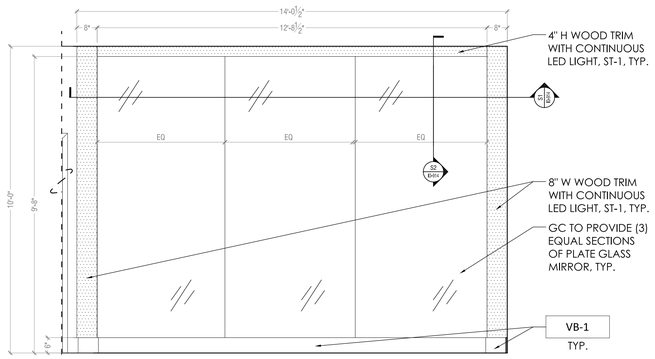

A FTINESS CENTER MIRROR MILLWORK WALL

SCALE: 1/2" = 1'-0"

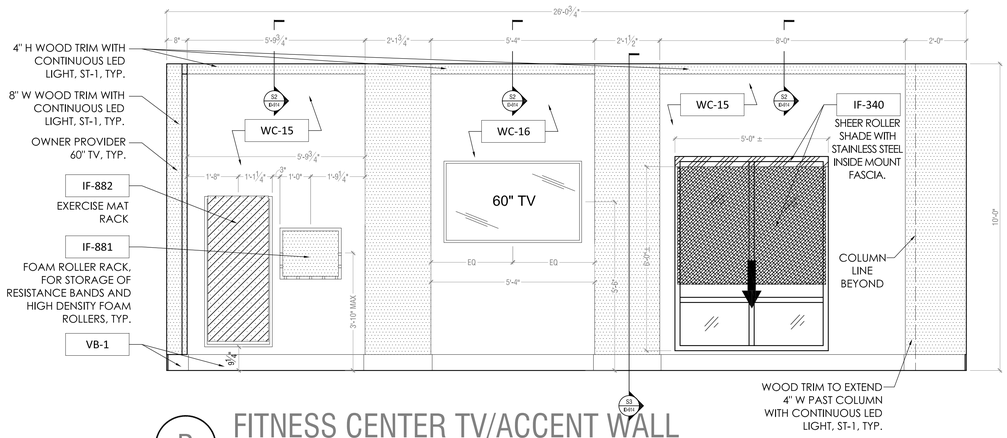

B FITNESS CENTER TV/ACCENT WALL

SCALE: 1/2" = 1'-0"

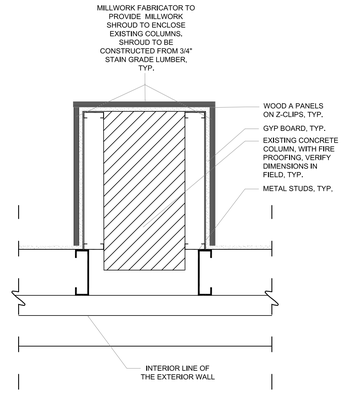

D1 MILLWORK COLUMN SHROUD SECTION

SCALE: 1 1/2" = 1'-0"

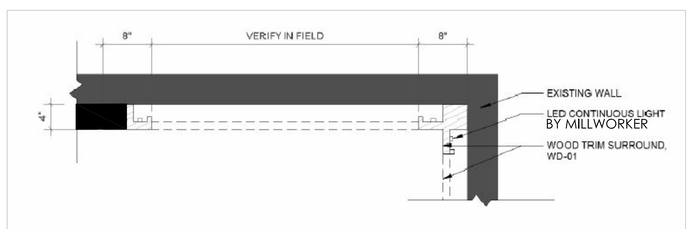

S1 FITNESS WALL SECTION AT MIRROR WALL

SCALE: 1 1/2" = 1'-0"

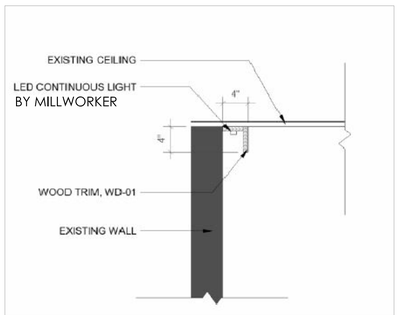

S2 FITNESS WALL SECTION AT MIRROR WALL FASCIA

SCALE: 1 1/2" = 1'-0"

S3 FITNESS WALL SECTION AT COLUMN

SCALE: 1" = 1'-0"

4IA ARCHITECTS
4031 University Drive, Suite 130, Fairfax, VA. 22030
Telephone: (703)352-1933 Fax: (703)691-9171

THIS DRAWING & THE DESIGN SHOWN THEREON ARE THE PROPERTY OF 3HA ARCHITECTS. THE REPRODUCTION, COPYING, OR USE OF THIS DRAWING WITH OUT THEIR SPECIFIC WRITTEN CONSENT IS PROHIBITED & ANY INFRINGEMENT WILL BE SUBJECT TO LEGAL ACTION.

DESIGN DIRECTIONS INTERNATIONAL
266 Crescent Circle SW., Marietta, GA 30064
Office: (770)424-8419 | Project Manager Cell: (404)909-2529

THIS DRAWING IS THE PROPERTY OF DESIGN DIRECTIONS INTERNATIONAL AND IS NOT TO BE REPRODUCED OR COPIED WHOLE OR IN PART. IT IS ONLY TO BE USED FOR THE PROJECT AND SITE SPECIFICALLY INTENDED HEREIN, AND IS NOT TO BE USED ON ANY OTHER PROJECT. IT IS TO BE RETURNED UPON REQUEST. SCALES AS STATED HEREON ARE VALID ON THE ORIGINAL DRAWING. THE DIMENSIONS OF WHICH ARE 30" X 42" INCHES.

CLIENT:
CHANTILLY HOTEL, LLC.
4335 CHANTILLY SHOPPING CENTER,
CHANTILLY, VA 20151

ISSUES/REVISIONS

NO.	DATE:	REMARKS:
	10/26/2020	BID DOCUMENT SET
1	11/3/2020	BID DOCUMENT SET REVISIONS
2	1/4/2021	DESIGN REVIEW REVISIONS

PROJECT NAME:
CROWNE PLAZA® HOTELS & RESORTS
4335 CHANTILLY SHOPPING CENTER
CHANTILLY, VA

DRAWING NAME
FITNESS CENTER MILLWORK DETAILS

SCALE	PROJECT NO.
AS NOTED	1903
DRAWN BY	DATE
KAK & DVE	10.2.2020

DRAWING NO.
ID-914